GTH2E Series 2-Stage High Efficiency Gas Furnace

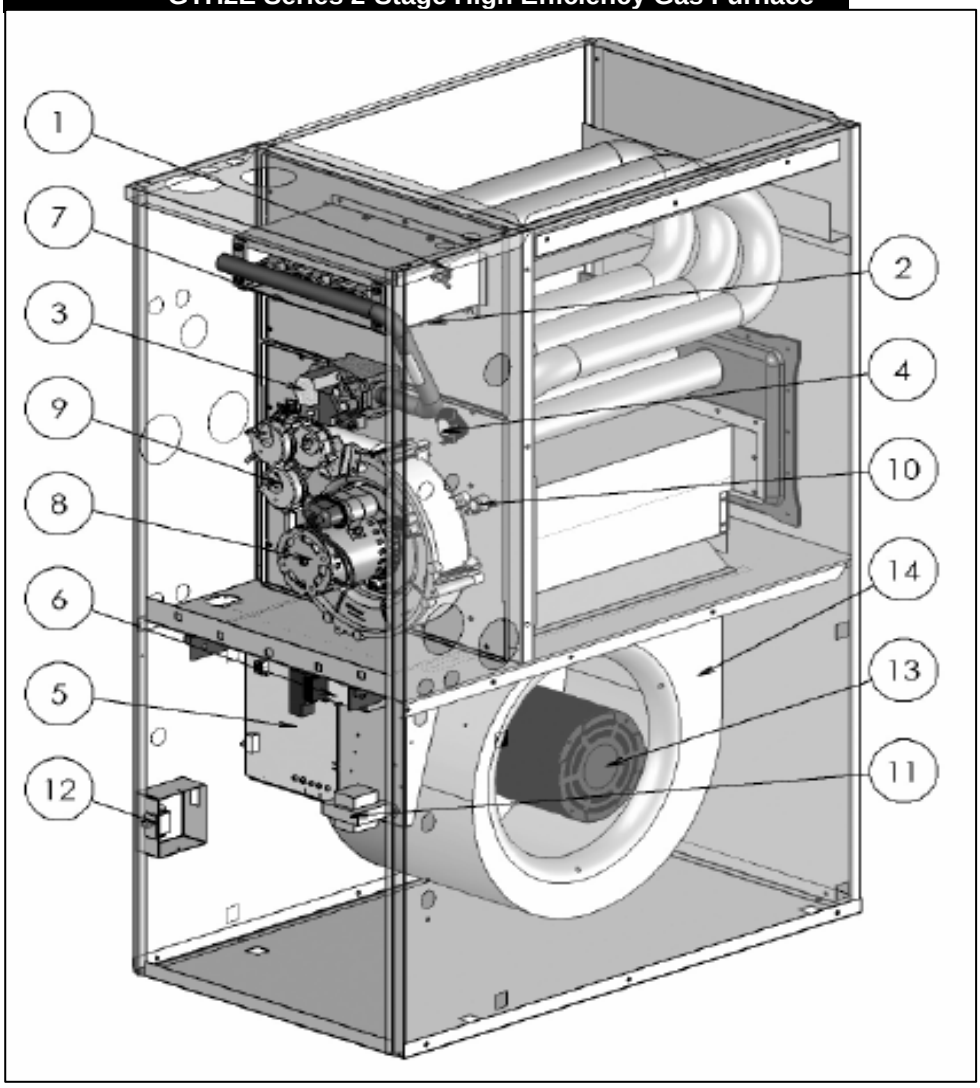

	GTH2E Series Gas-Fired 95% 2-Stage High Efficiency (Condensing) Multi-Positional Furnace w/ ECM Circulator					
Key No.	**Description**	**G95V060-3**	**G95V080-3**	**G95V080-4**	**G95V100-5**	**G95V120-5**
		14806010	14808010	14808014	14810010	14812010
	Cabinet Group					
	Top Panel	109006112AD	109006113AD	109006113AD	109006114AD	109006393AD
	Left Side Panel Assembly	109006107ADINSUL	109006107ADINSUL	109006107ADINSUL	109006107ADINSUL	109006107ADINSUL
	Right Side Panel Assembly	109006108ADINSUL	109006108ADINSUL	109006108ADINSUL	109006108ADINSUL	109006108ADINSUL
	Rear Panel	109006104ADINSUL	109006105ADINSUL	109006105ADINSUL	109006106ADINSUL	109006388ADINSUL
	Blower Division Panel Assembly	109006292	109006293	109006293	109006294	109006394
	Base Panel	109006098	109006099	109006099	109006100	109006389
	Upper Front Door Panel, (Sight Door)	109006109AD	109006110AD	109006110AD	109006111AD	109006392AD
	Door Sight Glass, Plug, WP-1000	28694	28694	28694	28694	28694
	Lower Front Blower Door Panel	109006092AD	109006093AD	109006093AD	109006094AD	109006391AD
	Door Sight Glass, Plug, WP-1000	28694	28694	28694	28694	28694
	Door Screw, 10-32 x 1/2, HWS *(4 required)*	2141015	2141015	2141015	2141015	2141015
	Door Cage Nut, 10-32, Cage, 202-136 *(4 required)*	28873	28873	28873	28873	28873
	Angle, Inner Front Side, (*2 Required*)	109006040	109006040	109006040	109006040	109006040
	Air Baffle, Rear	109006066	109006067	109006067	109006068	109006378
	Air Baffle, Left-side Panel	109006060	109006061	109006061	109006062	109006377
	Air Baffle, Right-Side Panel	109006063	- - -	- - -	109006065	- - -
	Heat Exchanger Group					
	Heat Exchanger Assembly	109006809	109006810	109006810	109006811	109006812
	Includes Recovery Coil Assembly, Covers, Turbulators, etc.					
15	Front Manifold Cover Kit, (*Plastic*)	550001522	550001522	550001522	550001523	550001523
	Flue Orifice, 0.850" I.D.	109006782	- - -	- - -	- - -	- - -
	Flue Orifice, 1.000" I.D.	- - -	109006437	109006437	- - -	- - -
	Flue Orifice, 1.250" I.D.	- - -	- - -	- - -	109006438	- - -
	Flue Orifice, 1.580" I.D.	- - -	- - -	- - -	- - -	109006818
	Inner Front Panel, Lower	109006473	109006474	109006474	109006475	109006476
	Blower Group					
19	Blower, Kit, c/w Wheel, 12-7T *Kit includes blower housing and 12-7 wheel*	550001520	550001520	550001520	- - -	- - -
19	Blower, Kit, c/w Wheel, Morrison 12-10T, 05-31285 *Kit includes blower housing and 12-10 wheel*	- - -	- - -	- - -	550001536	550001536
18	Blower Motor, 1/2 HP, ECM, Programmed, 2-Stage	550001658	550001866	- - -	- - -	- - -
18	Blower Motor, 3/4 HP, ECM, Programmed, 2-Stage	- - -	- - -	550001659	- - -	- - -
18	Kit, Blower Motor, 1 HP, ECM, Programmed, 2-Stage	- - -	- - -	- - -	550001861	550001657
16	Choke Coil, ECM, KA264F Brownsburg	- - -	- - -	550001660	550001660	550001660
	Blower Slide Rail, (*2 per unit*)	109006116	109006116	109006116	109006116	109006116
26	Blower Hardware Kit, 12" Diameter Blowers	550001815	550001815	550001815	550001815	550001815
	Electrical & Controls Group					
10	Transformer Kit, 115/24 v, 40 VA, BE161640REK0028	550001533	550001533	550001533	550001533	550001533

	GTH2E Series Gas-Fired 95% 2-Stage High Efficiency (Condensing) Multi-Positional Furnace w/ ECM Circulator					
Key No.	**Description**	**G95V060-3**	**G95V080-3**	**G95V080-4**	**G95V100-5**	**G95V120-5**
		14806010	14808010	14808014	14810010	14812010
16	Kit, Choke Coil, ECM, KA264F Brownsburg	- - -	- - -	550001660	550001660	550001660
17	Blower Door Safety Switch Kit, E65-01A *Kit includes switch, junction box and junction box cover*	550001532	550001532	550001532	550001532	550001532
25	Wire Harness Kit *Kit includes all wiring harnesses*	550001654	550001654	550001654	550001654	550001654
9	Control Board, Kit, UTEC 1170-23, 2-Stage w/ ECM	550001655	550001655	550001655	550001655	550001655
	Control Board Panel	109006791	109006791	109006791	109006797	109006797
13	Induced Blower Kit, Jakel AX3338A 2-Stage *Kit includes induced blower and flue orifice gaskets*	550001653	550001653	550001653	550001653	550001653
14	Pressure Switch Kit, 3SW, 2ST, MPL 9371VO-HT-0001 *Kit includes pressure switch and 3/16" pressure switch tubing*	550001649	550001649	550001649	550001649	550001649
5	Limit Switch Kit, 150°F, 60T11 L150, BOF, Therm-O-Disc 314210	- - -	- - -	- - -	550001525	550001525
5	Limit Switch Kit, 160°F, 60T11 L160, BOF, Therm-O-Disc 314415	550001514	550001514	550001514	- - -	- - -
	Junction Box Junction Box Cover	Order Blower Door Safety Switch Kit	Order Blower Door Safety Switch Kit	Order Blower Door Safety Switch Kit	Order Blower Door Safety Switch Kit	Order Blower Door Safety Switch Kit
20	Fuse Kit, 5 Amp, (3-fuses)	550001534	550001534	550001534	550001534	550001534
	Burner Group					
4	Gas Valve Kit, White-Rodgers 36G54, 2-Stage *Kit includes gas valve (N.G.) and L.P. Gas Regulator Spring*	550001656	550001656	550001656	550001656	550001656
	Inshot Burner, Beckett 2.75" W	- - -	- - -	- - -	- - -	- - -
	Burner Orifice, NG, SL, No.45 DMS Burner Orifice, L.P., SL, No. 55 DMS Burner Orifice, NG, HA, No. 47 DMS, (Cdn.) Burner Orifice, L.P., HA, No. 56 DMS, (Cdn.)	Order Conversion Kit	Order Conversion Kit	Order Conversion Kit	Order Conversion Kit	Order Conversion Kit
	Combustion Box Assembly	240006528	240006529	240006529	240006530	240006531
12	Hot Surface Ignitor, Norton 601 Type TB, 120 v	550001527	550001527	550001527	550001527	550001527
3	Flame Sensor Kit, c/w 8" Leads, Honeywell 272872	550001528	550001528	550001528	550001528	550001528
2	Flame Roll-Out Switch Kit, 350°F, INT08 L350	550001515	550001515	550001515	550001515	550001515
	Miscellaneous					
21	Air Filter Kit, 16 x 25 (*Optional*)	550001458	550001458	550001458	550001458	550001458
30	Sub-Base Kit	550001346	550001346	550001346	550001346	550001346
	Adapter, Condensate Collector, Fasco 850140730	240007936	240007936	240007936	240007936	240007936
24	Parts Bag Assembly Kit	550001521	550001521	550001521	550001521	550001521
	Installation, Operation & Maintenance Manual	240009767	240009767	240009767	240009767	240009767
	User's Manual	240009768	240009768	240009768	240009768	240009768
	Olsen Logo, Domed, 5½ x 1¾	240006644	240006644	240006644	240006644	240006644
	Airco Logo, 4.062 x 1.687	28564	28564	28564	28564	28564
	Concentric Vent Kits					
22	2-inch Concentric Vent Kit	29570	29570	29570	29570	29570
23	3-inch Concentric Vent Kit	29571	29571	29571	29571	29571

	GTH2E Series Gas-Fired 95% 2-Stage High Efficiency (Condensing) Multi-Positional Furnace w/ ECM Circulator					
Key No.	**Description**	**G95V060-3**	**G95V080-3**	**G95V080-4**	**G95V100-5**	**G95V120-5**
		14806010	14808010	14808014	14810010	14812010
	Conversion Kit					
27	Universal, Natural Gas / L.P. Gas / High Altitude *Kit includes orfices for NG and LP, SL and HA, plus orifice blanks.*	550001641	550001641	550001641	550001641	550001641
28	Natural Gas to L.P. Gas Conversion Kit *Kit includes L.P. Gas regulator spring and orifices, sea level only.*	550001648	550001648	550001648	550001648	550001648
29	L.P. Gas to Natural Gas Conversion Kit *Kit includes Nat. Gas regulator spring and orifices, sea level only.*	550001816	550001816	550001816	550001816	550001816
24	**Parts Bag Assembly Contents:**	550001521	550001521	550001521	550001521	550001521
	109005117 - (1) - Condensate Trap Mounting Plate					
	109006007 - (1) - 2-inch Vent Bracket					
	2130025 - (1) - 10-32 Square Nut					
	2141015 - (1) - 10-32 x 1/2 Screw					
	240005899 - (2) - Vent Clamp Gasket					
	18094 - (1) - Locknut, 2-inch					
	240005660 - (2) - 2 x 2 90º PVC Elbow					
	27907 - (1) - Condensate Trap					
	28690 - (1) - 2" Inlet Connector, 436-020					
	28693 - (1) - Grommet, Gas Line, 825 1.625" dia.					
	28872 - (1) - Gasket, Condensate Drain Trap					
	30A041801 - (5) - 8 x 1/2 Screw, TEK					
	240006663 - (1) - Tube, 5/8" ID, EPDM60 w/Clamps					
	240006662 - (1) - Tube, 1/2" ID, EPDM60 w/Clamps					

GTH2E Series Gas-Fired 2-Stage High Efficiency (Condensing) Multi-Positional Furnace w/ ECM Circulator

Heating Capacity - BTU/Hr.	GTH2E060-3	GTH2E080-3	GTH2E080-4	GTH2E100-5	GTH2E120-5
Full Rate Capacity (Input), 0 - 2000'	60,000	80,000	80,000	100,000	120,000
Full Rate Capacity (Output), 0 - 2000'	57,000	76,000	76,000	95,000	114,000
Reduced Rate Capacity (Input), 0 - 2000'	36,000	48,000	48,000	60,000	72,000
Reduced Rate Capacity (Output), 0 - 2000'	34,200	45,600	45,600	57,000	68,400
Full Rate Capacity (Input), 2000' - 4500'	54,000	72,000	72,000	90,000	108,000
Full Rate Capacity (Output), 2000' - 4500'	51,300	68,400	68,400	85,500	102,600
Reduced Rate Capacity (Input), 2000' - 4500'	32,400	43,200	43,200	54,000	64,800
Reduced Rate Capacity (Output), 2000' - 4500'	30,780	41,040	41,040	51,300	61,560
A.F.U.E.	94.9%	92.9%	92.9%	94.0%	93.8%
High-Fire Temperature Rise (°F)	35 - 65	35 - 65	35 - 65	35 - 65	35 - 65
Low-Fire Temperature Rise (°F)	25 - 55	25 - 55	25 - 55	25 - 55	25 - 55

Airflow & Cooling	GTH2E060-3	GTH2E080-3	GTH2E080-4	GTH2E100-5	GTH2E120-5
A/C Cooling Tons CFM @ 0.50" w.c. ESP	600 - 1200	600 - 1200	800 - 1600	800 - 2000	800 - 2000
Programmed Tons	1½, 2, 2½, 3	1½, 2, 2½, 3	2, 2½, 3, 4	2, 3, 4, 5	2, 3, 4, 5
Blower	12 - 7T	12 - 7T	12 - 7T	12 - 10T	12 - 10T
Motor, (ECM) HP	½	½	¾	1	1
Motor Speed, (RPM)	0 - 1200	0 - 1200	0 - 1200	0 - 1200	0 - 1200

Cabnetry - inches	GTH2E060-3	GTH2E080-3	GTH2E080-4	GTH2E100-5	GTH2E120-5
Width	16-⅞	18-½	18-½	20-½	23-½
Depth	29-⅛	29-⅛	29-⅛	29-⅛	29-⅛
Height	40-½	40-½	40-½	40-½	40-½
Supply Air Plenum Opening (w x d)	15-⅞ x 20	17-½ x 20	17-½ x 20	19-½ x 20	22-½ x 20
Return Air Plenum Opening	14 x 22	14 x 22	14 x 22	14 x 22	14 x 22

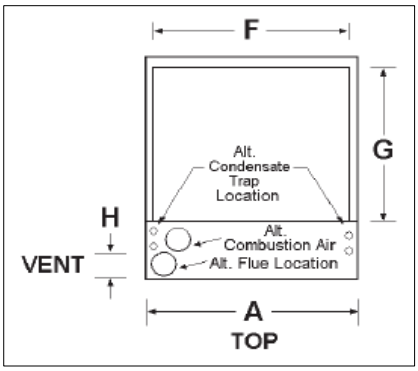

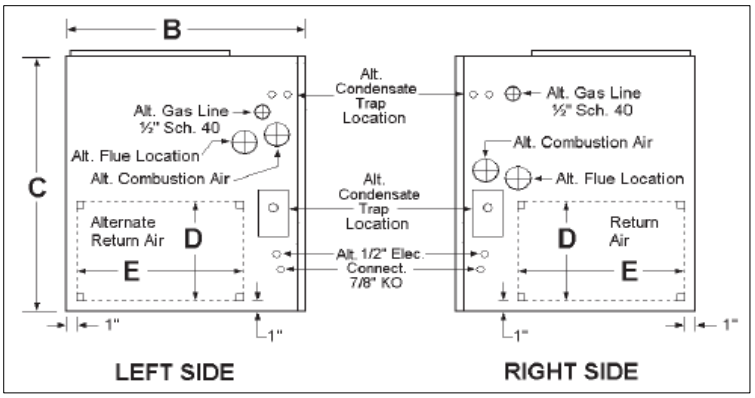

Venting	GTH2E060-3	GTH2E080-3	GTH2E080-4	GTH2E100-5	GTH2E120-5
Maximum Length, No Elbows, 1½" Pipe	25	- - -	- - -	- - -	- - -
Maximum Length, No Elbows, 2" Pipe	75	50	50	50	- - -
Maximum Length, No Elbows, 3" Pipe	100	100	100	100	100
Deduct 5-feet for each 90° Elbow Deduct 5-Feet for Concentric Vent Termination					