GTHB Series Gas-Fired 93% High Efficiency (Condensing) Multi-Positional Furnace

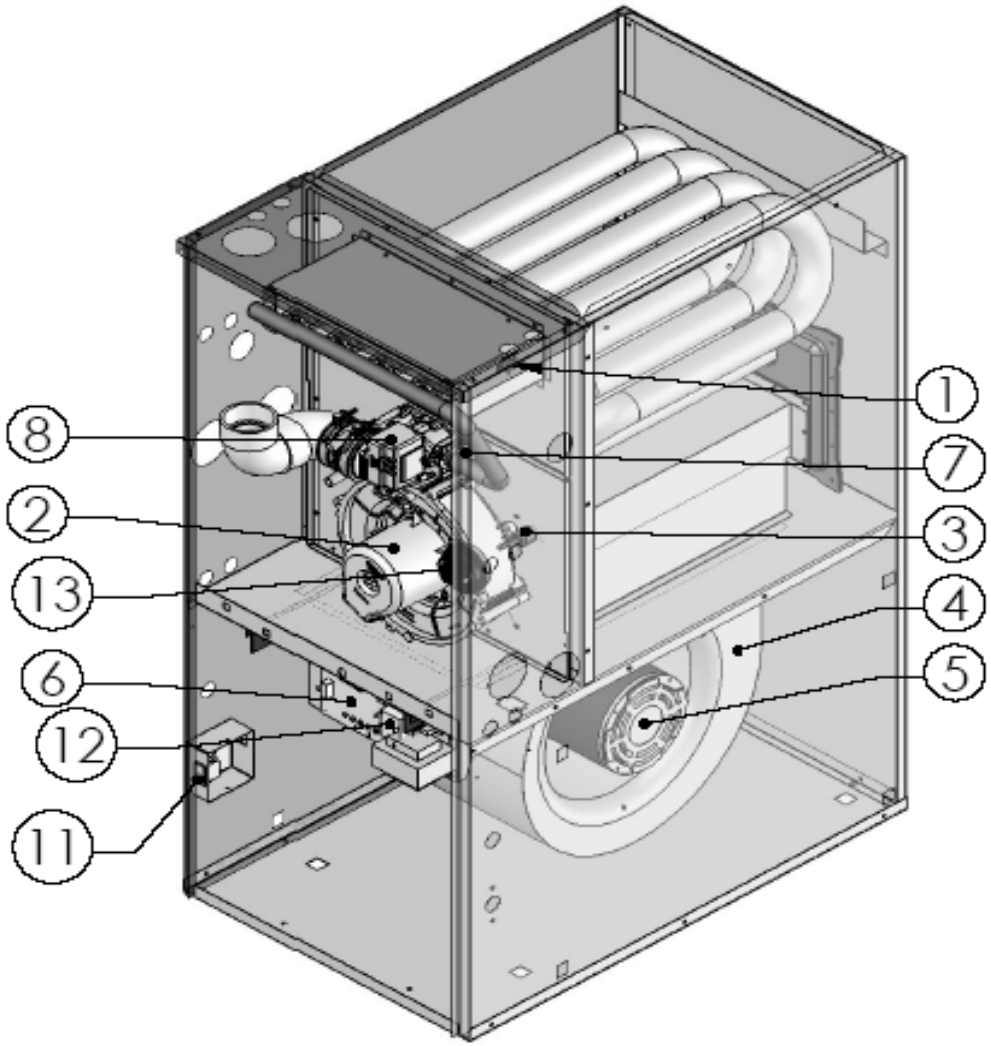

	GTHB Series Gas-Fired 93% High Efficiency (Condensing) Multi-Positional Furnace							
Key No.	Description	GTHB 40-2	GTHB 60-3	GTHB 80-3	GTHB 80-4	GTHB 100-3	GTHB 100-5	GTHB 120-5
		14704070	14706070	14708070	14708074	14710070	14710075	14712070
	Cabinet Group							
	Top Panel	109006112AD	109006112AD	109006113AD	109006113AD	109006114AD	109006114AD	109006393AD
	Rear Panel	109006104AD	109006104AD	109006105AD	109006105AD	109006106AD	109006106AD	109006388AD
	Left Side Panel Assembly	109006107AD	109006107AD	109006107AD	109006107AD	109006107AD	109006107AD	109006107AD
	Base Panel	109006098	109006098	109006099	109006099	109006100	109006100	109006389
	Right Side Panel Assembly	109006108AD	109006108AD	109006108AD	109006108AD	109006108AD	109006108AD	109006108AD
	Blower Division Panel Assembly	109006355	109006292	109006293	109006293	109006294	109006294	109006394
	Upper Front Door Panel, (Sight Door)	109006109AD	109006109AD	109006110AD	109006110AD	109006111AD	109006111AD	109006392AD
	Door Sight Glass, Plug, WP-1000	28694	28694	28694	28694	28694	28694	28694
	Lower Front Blower Door Panel	109006092AD	109006092AD	109006093AD	109006093AD	109006094AD	109006094AD	109006391AD
	Door Sight Glass, Plug, WP-1000	28694	28694	28694	28694	28694	28694	28694
	10-32 x 1/2 Door Screws, *4 per unit*	2141015	2141015	2141015	2141015	2141015	2141015	2141015
	10-32 Cage Nuts, 202-136, *4 per unit*	28873	28873	28873	28873	28873	28873	28873
	Angle, Inner Front Side, (*2 Required*)	109006040	109006040	109006040	109006040	109006040	109006040	109006040
	Air Baffle, Rear	109006066	109006066	109006067	109006067	109006068	109006068	109006378
	Air Baffle, Left-side Panel	- - -	109006060	109006061	109006061	109006062	109006062	109006377
	Air Baffle, Right-Side Panel	109006358	109006063	- - -	- - -	109006065	109006065	- - -
	Heat Exchanger Group							
	Heat Exchanger Assembly	109006354	109005969	109006284	109006284	109006285	109006285	109006399
	Includes Recovery Coil Assembly, Covers, Turbulators, etc.							
3	Kit, Front Manifold Cover, (*Plastic*)	550001522	550001522	550001522	550001522	550001523	550001523	550001523
	Includes Manifold Cover, Gaskets, and Hose Clamp							
	Flue Orifice, 1.000" I.D.	109006437	- - -	- - -	- - -	- - -	- - -	- - -
	Flue Orifice, 1.250" I.D.	- - -	- - -	109006438	109006438	- - -	- - -	- - -
	Flue Orifice, 1.426" I.D.	- - -	109006479	- - -	- - -	- - -	- - -	- - -
	Flue Orifice Gasket	240006025	240006025	240006025	240006025	240006025	240006025	240006025
	Inner Front Panel, Lower	109006473	109006473	109006474	109006474	109006475	109006475	109006476
	Blower Group							
4	Kit, Blower, c/w Wheel, 10 - 6	550001519	- - -	- - -	- - -	- - -	- - -	- - -
	Kit includes housing and blower wheel							
4	Kit, Blower, c/w Wheel, 12 - 7T	- - -	550001520	550001520	550001520	- - -	- - -	- - -
	Kit includes housing, blower wheel and mounting hardware							

	GTHB Series Gas-Fired 93% High Efficiency (Condensing) Multi-Positional Furnace							
Key No.	**Description**	**GTHB 40-2**	**GTHB 60-3**	**GTHB 80-3**	**GTHB 80-4**	**GTHB 100-3**	**GTHB 100-5**	**GTHB 120-5**
		14704070	14706070	14708070	14708074	14710070	14710075	14712070
4	Kit, Blower, c/w Wheel, 10 - 10 *Kit includes housing and blower wheel*	- - -	- - -	- - -	- - -	550001535	- - -	- - -
4	Kit, Blower, c/w Wheel, 12 - 10T *Kit includes housing and blower wheel*	- - -	- - -	- - -	- - -	- - -	550001536	550001536
5	Kit, Blower Motor, 1/3 hp *Kit includes motor and capacitor*	550001529	- - -	- - -	- - -	- - -	- - -	- - -
5	Kit, Blower Motor, 1/2 hp *Kit includes motor and capacitor*	- - -	550001530	550001530	- - -	550001530	- - -	- - -
5	Kit, Blower Motor, 3/4 hp *Kit includes motor and capacitor*	- - -	- - -	- - -	550001531	- - -	550001531	550001531
	Blower Slide Rail, (*2 per unit*)	109006116	109006116	109006116	109006116	109006116	109006116	109006116
21*	Blower Hardware Kit, 10" Diameter Blowers *Kit includes motor belly-band and mounting arms.*	550001537	- - -	- - -	- - -	550001537	- - -	- - -
20*	Blower Hardware Kit, 12" Diameter Blowers *Kit includes motor belly-band and mounting arms.*	- - -	550001538	550001538	550001538	- - -	550001538	550001538
	Electrical & Controls Group							
12	Kit, Transformer, 120/24 v, 40 VA	550001533	550001533	550001533	550001533	550001533	550001533	550001533
11	Kit, Blower Door Safety Switch *Kit includes switch, junction box and junction box cover.*	550001532	550001532	550001532	550001532	550001532	550001532	550001532
19*	Wire Harness - Control Board to Blower Motor *Kit includes all wiring harnesses.*	550001517	550001517	550001517	550001517	550001517	550001517	550001517
6	Kit, Integrated Control Board, UTEC 1012-974	550001524	550001524	550001524	550001524	550001524	550001524	550001524
	Control Board Panel	109006356	109006096	109006096	109006097	109006097	109006097	109006097
2	Kit, Induced Blower Replacement *Kit includes induced blower and flue outlet gasket*	550001516	550001516	550001516	550001516	550001516	550001516	550001516
13	Kit, Pressure Switch, -1.80" w.c. *Kit includes pressure switch and 3/16" pressure switch tubing.*	550001513	550001513	- - -	- - -	- - -	- - -	- - -
13	Pressure Switch, -1.70" w.c., Tridelta IS2 0396-5839B *Kit includes pressure switch and 3/16" pressure switch tubing.*	- - -	- - -	- - -	- - -	550001518	550001518	- - -
13	Pressure Switch, -1.60" w.c., Tridelta IS2 0396-5838B *Kit includes pressure switch and 3/16" pressure switch tubing.*	- - -	- - -	- - -	- - -	- - -	- - -	550001336
13	Pressure Switch, -1.50" w.c., Tridelta IS2 0396- *Kit includes pressure switch and 3/16" pressure switch tubing.*	- - -	- - -	550001903	550001903	- - -	- - -	- - -

	GTHB Series Gas-Fired 93% High Efficiency (Condensing) Multi-Positional Furnace							
Key No.	**Description**	**GTHB 40-2**	**GTHB 60-3**	**GTHB 80-3**	**GTHB 80-4**	**GTHB 100-3**	**GTHB 100-5**	**GTHB 120-5**
		14704070	14706070	14708070	14708074	14710070	14710075	14712070
7	Kit, Limit Switch, 150°F	550001525	- - -	- - -	- - -	550001525	550001525	550001525
7	Kit, Limit Switch, 160°F	- - -	550001514	550001514	550001514	- - -	- - -	- - -
14*	Kit, Fuse, UTEC 5 Amp	550001534	550001534	550001534	550001534	550001534	550001534	550001534
	Burner Group							
8	Gas Valve, Natural Gas, Honeywell VR8205S5802B *Kit includes L.P. Gas Regulator Spring*	550001526	550001526	550001526	550001526	550001526	550001526	550001526
	Inshot Burner, Beckett 2.75" W	- - -	- - -	- - -	- - -	- - -	- - -	- - -
	Burner Orifice, NG, SL, No.45 DMS	Order Conversion Kit	Order Conversion Kit	Order Conversion Kit	Order Conversion Kit	Order Conversion Kit	Order Conversion Kit	Order Conversion Kit
	Burner Orifice, L.P., SL, No. 55 DMS							
	Burner Orifice, NG, HA, No. 47 DMS, (Cdn.)							
	Burner Orifice, L.P., HA, No. 56 DMS, (Cdn.)							
	Combustion Box Assembly	240006158	240006159	240006160	240006160	240006161	240006161	240006162
9	Kit, Hot Surface Ignitor	550001527	550001527	550001527	550001527	550001527	550001527	550001527
10	Kit, Flame Sensor	550001528	550001528	550001528	550001528	550001528	550001528	550001528
1	Kit, Flame Roll-Out Switch, 350°F	550001515	550001515	550001515	550001515	550001515	550001515	550001515
	Miscellaneous							
15*	Kit, Air Filter, 16 x 25 x 1, (*Optional*) *Kit includes 16 x 25 Semi-Perm. Filter, Filter Rack and End Support*	550001458	550001458	550001458	550001458	550001458	550001458	550001458
18*	Parts Bag Assembly *See Selected Components List Below*	550001521	550001521	550001521	550001521	550001521	550001521	550001521
	Adapter, Condensate Collector, Fasco 850140730	240007936	240007936	240007936	240007936	240007936	240007936	240007936
	Installation, Operation & Maintenance Manual	240005603	240005603	240005603	240005603	240005603	240005603	240005603
	User's Manual	240005604	240005604	240005604	240005604	240005604	240005604	240005604
	Kit, Sub-Base, *for downflow installations.*	550001346	550001346	550001346	550001346	550001346	550001346	550001346
	Olsen Logo, 4.062 x 1.687	28563	28563	28563	28563	28563	28563	28563
	Airco Logo, 4.062 x 1.687	28564	28564	28564	28564	28564	28564	28564
	Concentric Vent Kits							
16*	Kit, 2-inch Concentric Vent	29570	29570	29570	29570	29570	29570	- - -
17*	Kit, 3-inch Concentric Vent	29571	29571	29571	29571	29571	29571	29571

	GTHB Series Gas-Fired 93% High Efficiency (Condensing) Multi-Positional Furnace							
Key No.	**Description**	**GTHB 40-2**	**GTHB 60-3**	**GTHB 80-3**	**GTHB 80-4**	**GTHB 100-3**	**GTHB 100-5**	**GTHB 120-5**
		14704070	14706070	14708070	14708074	14710070	14710075	14712070
	Conversion Kit							
22*	Natural Gas / L.P. Gas / High Altitude *Kit includes orifices for NG and LP, SL and HA, plus blanks*	550001334	550001334	550001334	550001334	550001334	550001334	550001334
22*	Natural Gas to L.P. Gas Conversion Kit *Natural Gas to L.P. Gas, (Sea Level Only)*	550001335	550001335	550001335	550001335	550001335	550001335	550001335
22*	Natural Gas Sea Level to High Altitude Conversion Kit (Canada Only) *Natural Gas - Sea Level to High Altitude*	550001628	550001628	550001628	550001628	550001628	550001628	550001628
18*	**Parts Bag Assembly Contents:**	550001521	550001521	550001521	550001521	550001521	550001521	550001521
	109005117 - (1) - Condensate Trap Mounting Plate							
	109006007 - (1) - 2-inch Vent Bracket							
	2130025 - (1) - 10-32 Square Nut							
	2141015 - (1) - 10-32 x 1/2 Screw							
	240005899 - (2) - Vent Clamp Gasket							
	18094 - (1) - Locknut, 2-inch							
	240005660 - (2) - 2 x 2 90º PVC Elbow							
	27907 - (1) - Condensate Trap							
	28690 - (1) - 2" Inlet Connector, 436-020							
	28693 - (1) - Grommet, Gas Line, 825 1.625" dia.							
	28872 - (1) - Gasket, Condensate Drain Trap							
	30A041801 - (5) - 8 x 1/2 Screw, TEK							
	240006663 - (1) - Tube, 5/8" ID, EPDM60 w/Clamps							
	240006662 - (1) - Tube, 1/2" ID, EPDM60 w/Clamps							

GTHB Series Gas-Fired 93% High Efficiency (Condensing) Multi-Positional Furnace

Capacities - BTUH

	GTHB040-2	GTHB060-3	GTHB080-3	GTHB080-4	GTHB100-3	GTHB100-5	GTHB120-5
Input - 0' - 2000'	40,000	60,000	80,000	80,000	100,000	100,000	120,000
Output - 0' - 2000'	37,200	55,800	74,400	74,400	93,000	93,000	111,600
Input - 2000' - 4500'	36,000	54,000	72,000	72,000	90,000	90,000	108,000
Output - 2000' - 4500'	33,480	50,220	66,960	66,960	83,700	83,700	100,440

Airflow & Cooling

	GTHB040-2	GTHB060-3	GTHB080-3	GTHB080-4	GTHB100-3	GTHB100-5	GTHB120-5
Cooling Capacity - Tons	2	3	3	4	3	5	5
Max CFM @ 0.20" w.c.	1044	1454	1621	1664	1716	2172	2305
Max CFM @ 0.50" w.c.	908	1321	1524	1570	1572	1965	2150
Motor - PSC - Direct Drive	1/3	1/2	1/2	3/4	1/2	3/4	3/4
Blower	10-6R DD	12-7T DD	12-7T DD	12-7T DD	11-10 DD	12-10T DD	12-10T DD

Cabinetry - Inches

	GTHB040-2	GTHB060-3	GTHB080-3	GTHB080-4	GTHB100-3	GTHB100-5	GTHB120-5
Width	17	17	18½	18½	20½	20½	23½
Depth	29	29	29	29	29	29	29
Height	40	40	40	40	40	40	40
Supply Air Plenum (w x d)	16 x 20	16 x 20	17½ x 20	17½ x 20	19½ x 20	19½ x 20	22½ x 20
Return Air Plenum	14 x 22	14 x 22	14 x 22	14 x 22	14 x 22	14 x 22	14 x 22

Venting

	GTHB040-2	GTHB060-3	GTHB080-3	GTHB080-4	GTHB100-3	GTHB100-5	GTHB120-5
Max Feet - 1½"	50	25	- - -	- - -	- - -	- - -	- - -
Max Feet - 2"	100	75	50	50	50	50	- - -
Max Feet - 3"	- - -	100	100	100	100	100	100
	Deduct 5-feet for each elbow						