GTHC Series Gas-Fired 95% High Efficiency (Condensing) Multi-Positional Furnace

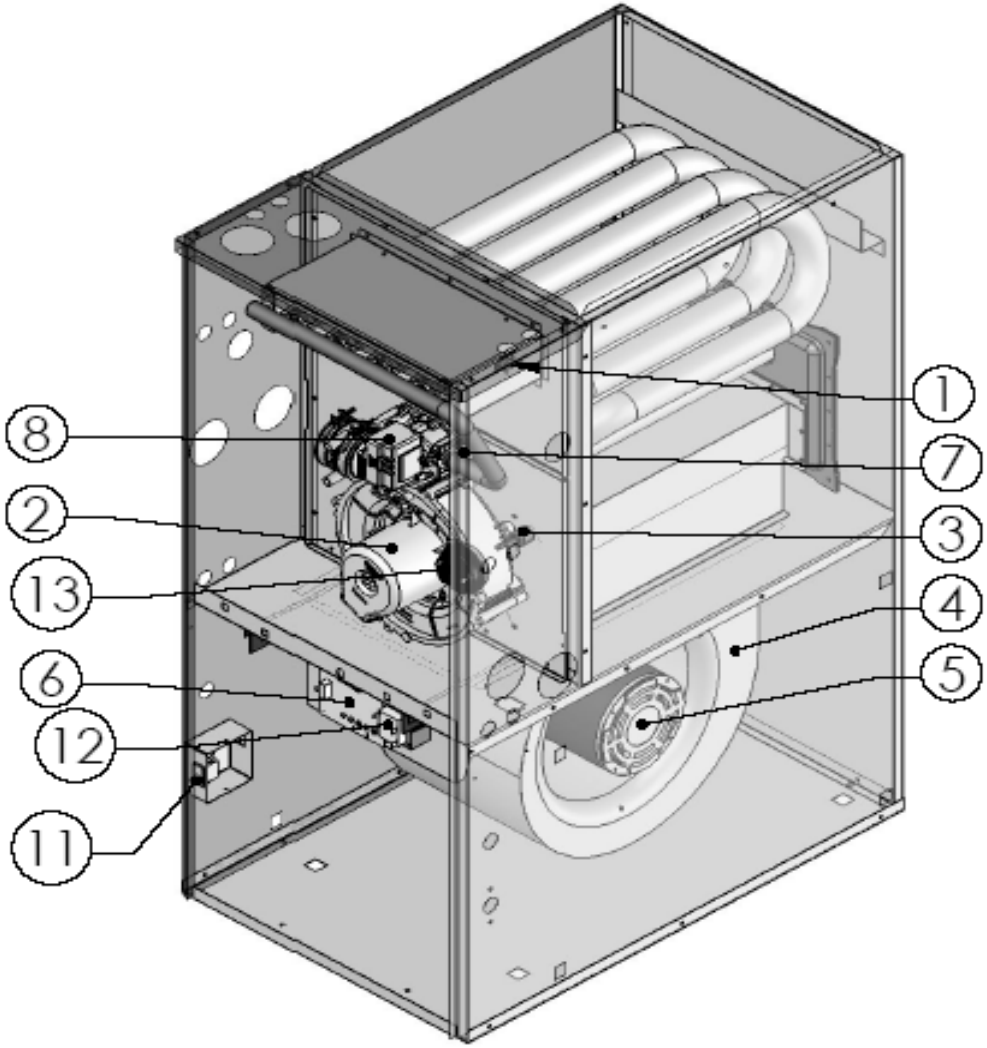

	GTHC Series Gas-Fired 95% High Efficiency (Condensing) Multi-Positional Furnace						
Key No.	**Description**	**GTHC 50-3**	**GTHC 65-3**	**GTHC 80-3**	**GTHC 80-5**	**GTHC 100-3**	**GTHC 100-5**
		14705020	14706520	14708020	14708025	14710020	14710025
	Cabinet Group						
	Top Panel	109006112AD	109006113AD	109006114AD	109006114AD	109006393AD	109006393AD
	Rear Panel	109006104AD	109006105AD	109006106AD	109006106AD	109006388AD	109006388AD
	Left Side Panel Assembly	109006107AD	109006107AD	109006107AD	109006107AD	109006107AD	109006107AD
	Base Panel	109006098	109006099	109006100	109006100	109006389	109006389
	Right Side Panel Assembly	109006108AD	109006108AD	109006108AD	109006108AD	109006108AD	109006108AD
	Blower Division Panel Assembly	109006292	109006293	109006294	109006294	109006394	109006394
	Upper Front Door Panel, (Sight Door)	109006109AD	109006110AD	109006111AD	109006111AD	109006392AD	109006392AD
	Door Sight Glass, Plug, WP-1000	28694	28694	28694	28694	28694	28694
	Lower Front Blower Door Panel	109006092AD	109006093AD	109006094AD	109006094AD	109006391AD	109006391AD
	Door Sight Glass, Plug, WP-1000	28694	28694	28694	28694	28694	28694
	Angle, Inner Front Side, (*2 Required*)	109006040	109006040	109006040	109006040	109006040	109006040
	Air Baffle, Rear	109006066	109006067	109006068	109006068	109006378	109006378
	Air Baffle, Left-side Panel	109006060	109006061	109006062	109006062	109006377	109006377
	Air Baffle, Right-Side Panel	109006063	- - -	109006065	109006065	- - -	- - -
	Heat Exchanger Group						
	Heat Exchanger Assembly	109006431	109006594	109006595	109006595	109006596	109006596
	Includes Recovery Coil Assembly, Covers, Turbulators, etc.						
3	Kit, Front Manifold Cover, (*Plastic*), incl. Gaskets	550001522	550001522	550001523	550001523	550001523	550001523
	Flue Orifice, 0.810" I.D.	109006588	- - -	- - -	- - -	- - -	- - -
	Flue Orifice, 0.900" I.D.	- - -	109006589	- - -	- - -	- - -	- - -
	Flue Orifice, 1.080" I.D.	- - -	- - -	109006590	109006590	- - -	- - -
	Flue Orifice, 1.110" I.D.	- - -	- - -	- - -	- - -	109006591	109006591
	Flue Orifice Gasket	240006025	240006025	240006025	240006025	240006025	240006025
	Inner Front Panel, Lower	109006473	109006474	109006475	109006475	109006476	109006476

	GTHC Series Gas-Fired 95% High Efficiency (Condensing) Multi-Positional Furnace						
Key No.	**Description**	**GTHC 50-3**	**GTHC 65-3**	**GTHC 80-3**	**GTHC 80-5**	**GTHC 100-3**	**GTHC 100-5**
		14705020	14706520	14708020	14708025	14710020	14710025
	Blower Group						
4	Kit, Blower, c/w Wheel, 12-7T, Morrison	550001520	550001520	- - -	- - -	- - -	- - -
4	Kit, Blower, c/w Wheel, 100-10R DD, Morrison	- - -	- - -	550001535	- - -	550001535	- - -
4	Kit, Blower, c/w Wheel, 11-10 DD, Morrison	- - -	- - -	- - -	- - -	550001857	- - -
4	Kit, Blower, c/w Wheel, 120-10T DD, Morrison 05-31285	- - -	- - -	- - -	550001536	- - -	550001536
5	Kit, Blower Motor, 1/2 hp, 4-Speed, incl. 10 mfd Capacitor	550001530	550001530	550001530	- - -	550001530	- - -
5	Kit, Blower Motor, 3/4 hp, 4-Speed, incl. 20 mfd Capacitor	- - -	- - -	- - -	550001531	550001531	550001531
	Blower Slide Rail, (*2 per unit*)	109006116	109006116	109006116	109006116	109006116	109006116
20	Kit, Blower Hardware, 10" Diameter Blowers	- - -	- - -	550001537	- - -	550001537	- - -
21	Kit, Blower Hardware, 12" Diameter Blowers	550001538	550001538	- - -	550001538	- - -	550001538
	Electrical & Controls Group						
12	Kit, Transformer, 115/24 v, 40 VA, BE161640REK0028	550001533	550001533	550001533	550001533	550001533	550001533
11	Kit, Blower Door Safety Switch, E65-01A	550001532	550001532	550001532	550001532	550001532	550001532
19	Kit, Wire Harnesses, All	550001517	550001517	550001517	550001517	550001517	550001517
6	Kit, Integrated Control Board, UTEC 1012-974	550001524	550001524	550001524	550001524	550001524	550001524
	Control Board Panel	240005573	109006096	109006097	109006097	109006097	109006097
2	Kit, Induced Blower, Jakel AX3002B, w/ Gasket & Termination	550001516	550001516	550001516	550001516	550001516	550001516
13	Kit, Pressure Switch Assembly, (2 x -0.70" w.c.), MPL 9371VOHDX004	550001585	550001585	550001585	550001585	550001585	550001585
7	Kit, Limit Switch, 140°F, BOF	- - -	- - -	- - -	- - -	550001584	550001584
7	Kit, Limit Switch, 150°F, BOF	550001525	550001525	550001525	550001525	- - -	- - -
	Junction Box	Order Door	Order Door	Order Door	Order Door	Order Door	Order Door
	Junction Box Cover	Switch Kit	Switch Kit	Switch Kit	Switch Kit	Switch Kit	Switch Kit
14	Kit, Fuse Kit, 5 Amp	550001534	550001534	550001534	550001534	550001534	550001534

	GTHC Series Gas-Fired 95% High Efficiency (Condensing) Multi-Positional Furnace						
Key No.	**Description**	**GTHC 50-3**	**GTHC 65-3**	**GTHC 80-3**	**GTHC 80-5**	**GTHC 100-3**	**GTHC 100-5**
		14705020	14706520	14708020	14708025	14710020	14710025
	Burner Group						
8	Kit, Gas Valve, Natural Gas, incl. L.P. Regulator Spring	550001526	550001526	550001526	550001526	550001526	550001526
	Inshot Burner, Beckett 2.75" W	- - -	- - -	- - -	- - -	- - -	- - -
	Burner Orifice, NG, SL, No.48 DMS	Order Conversion Kit	Order Conversion Kit	Order Conversion Kit	Order Conversion Kit	Order Conversion Kit	Order Conversion Kit
	Burner Orifice, L.P., SL, No. 56 DMS						
	Burner Orifice, NG, HA, No. 49 DMS, (Cdn.)						
	Burner Orifice, L.P., HA, No. 57 DMS, (Cdn.)						
	Combustion Box Assembly	240006323	240006324	240006325	240006325	240006326	240006326
9	Kit, Hot Surface Ignitor, Norton 601 Type TB, 120 v	550001527	550001527	550001527	550001527	550001527	550001527
10	Kit, Flame Sensor, c/w 8" Leads, Honeywell 272872	550001528	550001528	550001528	550001528	550001528	550001528
1	Kit, Flame Roll-Out Switch, INT08 L350, (*2 per Unit*)	550001515	550001515	550001515	550001515	550001515	550001515
	Miscellaneous						
15	Kit, Air Filter, 16 x 25 x 1, incl. Filter Frame	550001458	550001458	550001458	550001458	550001458	550001458
18	Kit, Parts Bag Assembly	550001521	550001521	550001521	550001521	550001521	550001521
	Adapter, Condensate Collector, Fasco 850140730	240007936	240007936	240007936	240007936	240007936	240007936
	Installation, Operation & Maintenance Manual	240006339	240006339	240006339	240006339	240006339	240006339
	User's Manual	240005604	240005604	240005604	240005604	240005604	240005604
	Kit, Sub-Base, *for downflow installations.*	550001346	550001346	550001346	550001346	550001346	550001346
	Olsen Logo, 4.062 x 1.687	28563	28563	28563	28563	28563	28563
	Airco Logo, 4.062 x 1.687	28564	28564	28564	28564	28564	28564
	Concentric Vent Kits						
16	2-inch Concentric Vent Kit	29570	29570	29570	29570	29570	29570
17	3-inch Concentric Vent Kit	29571	29571	29571	29571	29571	29571
	Conversion Kit						
22	Natural Gas / L.P. Gas / High Altitude (Universal), U.S. & Can.	550001338	550001338	550001338	550001338	550001338	550001338
22	Natural Gas to L.P. Gas, Sea Level Only	550001337	550001337	550001337	550001337	550001337	550001337
22	Natural Gas, Sea Level to High Altitude, (Can.) (2000' - 4500')	550001629	550001629	550001629	550001629	550001629	550001629

	GTHC Series Gas-Fired 95% High Efficiency (Condensing) Multi-Positional Furnace						
Key No.	**Description**	**GTHC 50-3**	**GTHC 65-3**	**GTHC 80-3**	**GTHC 80-5**	**GTHC 100-3**	**GTHC 100-5**
		14705020	14706520	14708020	14708025	14710020	14710025
18	**Parts Bag Assembly Contents:**	550001521	550001521	550001521	550001521	550001521	550001521
	109005117 - (1) - Condensate Trap Mounting Plate						
	109006007 - (1) - 2-inch Vent Bracket						
	2130025 - (1) - 10-32 Square Nut						
	2141015 - (1) - 10-32 x 1/2 Screw						
	240005899 - (2) - Vent Clamp Gasket						
	18094 - (1) - Locknut, 2-inch						
	240005660 - (2) - 2 x 2 90º PVC Elbow						
	27907 - (1) - Condensate Trap						
	28690 - (1) - 2" Inlet Connector, 436-020						
	28693 - (1) - Grommet, Gas Line, 825 1.625" dia.						
	28872 - (1) - Gasket, Condensate Drain Trap						
	30A041801 - (5) - 8 x 1/2 Screw, TEK						
	240006663 - (1) - Tube, 5/8" ID, EPDM60 w/Clamps						
	240006662 - (1) - Tube, 1/2" ID, EPDM60 w/Clamps						

GTHC Series Gas-Fired 95% High Efficiency (Condensing) Multi-Positional Furnace

Capacities - BTUH

	GTHC050-3	GTHC065-3	GTHC080-3	GTHC080-5	GTHC100-3	GTHC100-5
Input - 0' - 2000'	48,000	64,000	80,000	80,000	96,000	96,000
Output - 0' - 2000'	45,600	60,800	76,000	76,000	91,200	91,200
Input - 2000' - 4500'	44,000	58,000	72,000	72,000	86,000	86,000
Output - 2000' - 4500'	41,800	55,100	68,400	68,400	81,700	81,700

Airflow & Cooling

	GTHC050-3	GTHC065-3	GTHC080-3	GTHC080-5	GTHC100-3	GTHC100-5
Cooling Capacity - Tons	3	3	3	5	3	5
Max CFM @ 0.20" w.c.	1328	1621	1717	2172	1792	2305
Max CFM @ 0.50" w.c.	1199	1524	1408	1965	1685	2150
Motor - PSC - Direct Drive	1/2	1/2	1/2	3/4	1/2	3/4
Blower	12-7T	12-7T	10-10	12-10T	11-10	12-10T

Cabinetry - Inches

	GTHC050-3	GTHC065-3	GTHC080-3	GTHC080-5	GTHC100-3	GTHC100-5
Width	17	18½	20½	20½	23½	23½
Depth	29	29	29	29	29	29
Height	40	40	40	40	40	40
Supply Air Plenum (w x d)	16 x 20	17½ x 20	19½ x 20	19½ x 20	22½ x 20	22½ x 20
Return Air Plenum	14 x 22	14 x 22	14 x 22	14 x 22	14 x 22	14 x 22

Venting

	GTHC050-3	GTHC065-3	GTHC080-3	GTHC080-5	GTHC100-3	GTHC100-5
Max Feet - 1½"	40	25	- - -	- - -	- - -	- - -
Max Feet - 2"	100	75	75	75	75	75
Max Feet - 3"	- - -	100	100	100	100	100
Deduct 5-feet for each elbow						