HMS Series, Mid-Efficiency Upflow Gas-Fired Furnace, (Original)

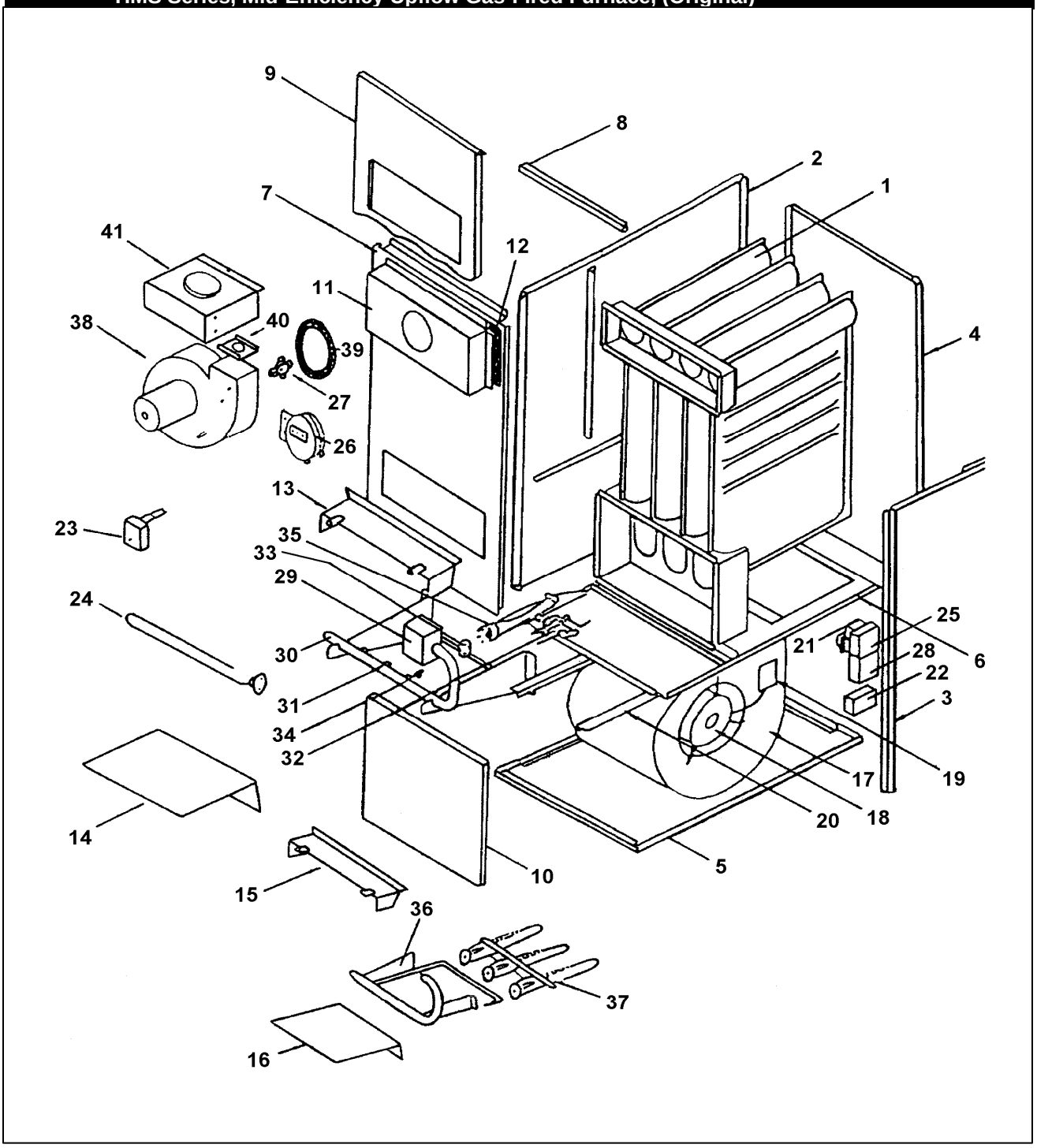

HMS Series, Mid-Efficiency Upflow Gas-Fired Furnace, (Original) - Challenger (Canada), UltraSave (United States).						
Ref. No.	**Description**	**HMS-52**	**HMS-72**	**HMS-90 Cdn**	**HMS-90 U.S.**	**HMS-100H**
	Sheet Metal Group					
1	Heat Exchanger Assembly	N/A	N/A	N/A	N/A	N/A
2	Left Side Panel Assembly	N/A	N/A	N/A	N/A	N/A
3	Right Side Panel Assembly	N/A	N/A	N/A	N/A	N/A
4	Rear Panel Assembly	N/A	N/A	N/A	N/A	N/A
5	Base Panel	N/A	N/A	N/A	N/A	N/A
6	Blower Division Panel Assembly	N/A	N/A	N/A	N/A	N/A
7	Inner Front Panel Assembly	N/A	N/A	N/A	N/A	N/A
8	Door Hanger Channel	N/A	N/A	N/A	N/A	N/A
9	Upper Front Door	N/A	N/A	N/A	N/A	N/A
10	Blower Access Door	N/A	N/A	N/A	N/A	N/A
11	Collection Box	N/A	N/A	N/A	N/A	N/A
12	Collection Box Gasket	N/A	N/A	N/A	N/A	N/A
13	Heat Shield, Inshot Burners	N/A	N/A	N/A	N/A	N/A
14	Bottom Shield	N/A	N/A	N/A	- - -	N/A
15	Heat Shield, BSI Burners	N/A	N/A	N/A	N/A	- - -
16	Bottom Shield, BSI Burners	N/A	N/A	N/A	N/A	- - -
	Filter Frame Assembly, 16 x 20 x 1	N/A	N/A	N/A	N/A	N/A
	Filter Frame Assembly, 16 x 25 x 1	- - -	- - -	- - -	- - -	- - -
	Filter Frame End Support, 16 x 20	N/A	N/A	N/A	N/A	N/A
	Filter Frame End Support, 16 x 25	- - -	- - -	- - -	- - -	- - -
	Blower Group - Direct Drive					
	Blower Assembly, Complete	N/A	N/A	N/A	N/A	N/A
17	Blower Housing and Wheel, 9-4, Airdex DC916-416-5	N/A	- - -	- - -	- - -	- - -
17	Blower Housing and Wheel, 9-6, Airdex DC916-600-5	- - -	N/A	N/A	- - -	N/A
17	Blower Housing and Wheel, 9-9, Delhi G9-DD, 9002002	- - -	- - -	- - -	28754	- - -
17	Blower Housing and Wheel, DDMorrison 100-10R DD Special	- - -	- - -	- - -	- - -	- - -
	Blower Wheel, 9-4 Direct Drive	N/A	- - -	- - -	- - -	- - -
	Blower Wheel, Airdex CM916-600, 5014731	- - -	26288	26288	- - -	26288
	Blower Wheel, Delhi 9-9 DD, or Airdex CM916-916	- - -	- - -	- - -	N/A	- - -
	Blower Wheel, CM1020-1020	- - -	- - -	- - -	- - -	- - -
18	Blower Motor, 1/4 hp, 4-Speed, Direct Drive, AOS Cat. No. 752	30059	30059	30059	30059	30059

HMS Series, Mid-Efficiency Upflow Gas-Fired Furnace, (Original) - Challenger (Canada), UltraSave (United States).						
Ref. No.	**Description**	**HMS-52**	**HMS-72**	**HMS-90 Cdn**	**HMS-90 U.S.**	**HMS-100H**
18	Blower Motor, 1/3 hp, 4-Speed, Direct Drive, AOS OLE1036	- - -	- - -	- - -	550001987	550001987
18	Blower Motor, 1/2 hp, 4-Speed, Direct Drive, G.E. 5KCP39LGY723BS	- - -	- - -	- - -	- - -	- - -
	Alt: Blower 1/2 HP Motor Kit W/ Mounting Hardware, No Capacitor	- - -	- - -	- - -	- - -	- - -
	Alt: Blower 1/2 HP Motor Kit W/ Capacitor, No Hardware	- - -	- - -	- - -	- - -	- - -
	Blower Motor Mounting Band	- - -	17811	17811	17811	17811
	Blower Motor Mounting Arm, (*3 Required*)	- - -	26250	26250	26250	26250
19	Capacitor, 5 mfd@370 vac, M22P3705M00	27741	27741	27741	27741	27741
19	Capacitor, 7.5 mfd@370 vac, M22P3707M00	- - -	- - -	- - -	- - -	- - -
19	Capacitor, 10 mfd@370 vac, M22P3710M00	- - -	- - -	- - -	- - -	- - -
19	Capacitor, 12.5 mfd@370 vac, M22P3712N00	- - -	- - -	- - -	27744	27744
	Capacitor Insulator, 44603-0009	27769	27769	27769	27769	27769
	Capacitor Strap, 51045-0013	27760	27760	27760	27760	27760
20	Blower Mounting Rail, (*2 Required*)	N/A	N/A	N/A	N/A	N/A
	Blower Group - Belt Drive					
	Blower Assembly, Complete	N/A	N/A	N/A	- - -	N/A
	Blower Housing and Wheel, Delhi G10-5	2040106	2040106	2040106	- - -	2040106
	Blower Housing and Wheel, Delhi G10-8	- - -	- - -	- - -	- - -	- - -
	Blower Housing and Wheel, Delhi G10	- - -	- - -	- - -	- - -	- - -
	Blower Wheel, 10-5	N/A	N/A	N/A	- - -	N/A
	Blower Wheel, 10-8, Airdex CL1020-800, 5014672	- - -	- - -	- - -	- - -	- - -
	Blower Wheel, 10-10, Delhi 6039004	- - -	- - -	- - -	- - -	- - -
	Blower Motor, 1/4 hp, Single-Speed	N/A	N/A	N/A	- - -	N/A
	Blower Motor, 1/3 hp, Single-Speed	- - -	- - -	102000153	- - -	102000153
	Blower Motor, 1/2 hp, Single-Speed	- - -	- - -	- - -	- - -	- - -
	Blower Motor, 1/4 hp, Two-Speed	N/A	N/A	N/A	- - -	N/A
	Blower Motor, 1/3 hp, Two-Speed	- - -	- - -	- - -	- - -	N/A
	Blower Motor, 1/2 hp, Two-Speed	- - -	- - -	- - -	- - -	- - -
	Motor Pulley, 3¼ x ½, Variable Speed	2240001	2240001	2240001	- - -	2240001
	Blower Pulley, 8 x ¾	N/A	- - -	- - -	- - -	- - -
	Blower Pulley, 7 x ¾	- - -	2240008	- - -	- - -	- - -
	Blower Pulley, 6 x ¾	2240006	- - -	2240006	- - -	2240006
	Blower Pulley, 5 x ¾	- - -	2240005	2240005	- - -	2240005
	Fan Belt, 4L350	- - -	2240065	2240065	- - -	2240065
	Fan Belt, 4L360	- - -	N/A	N/A	- - -	N/A

HMS Series, Mid-Efficiency Upflow Gas-Fired Furnace, (Original) - Challenger (Canada), UltraSave (United States).						
Ref. No.	**Description**	**HMS-52**	**HMS-72**	**HMS-90 Cdn**	**HMS-90 U.S.**	**HMS-100H**
	Fan Belt, 4L370	N/A	- - -	N/A	- - -	N/A
	Fan Belt, 4L380	2240017	2240017	2240017	- - -	2240017
	Fan Belt, 4L390	N/A	N/A	- - -	- - -	- - -
	Fan Belt, 4L400	2240019	- - -	- - -	- - -	- - -
	Blower Bearing, Delhi, # 8 - ¾ Sleeve, 8100013, (*2 Required*)	2040036	2040036	2040036	- - -	2040036
	Blower Bearing Rubber Sleeve, Delhi, # 16 - ¾, 8860019, (*2 Required*)	12982	12982	12982	- - -	12982
	Bearing Bracket	28210	28210	28210	- - -	28210
	Blower Shaft	N/A	N/A	N/A	- - -	N/A
	Thrust Collar, Delhi 6000021, 3/4"	28094	28094	28094	- - -	28094
	Thrust Spacer	npn	npn	npn	- - -	npn
	Motor Mounting Bracket	npn	npn	npn	- - -	npn
	Blower Mounting Rail, (*2 Required*)	N/A	N/A	N/A	- - -	N/A
	Electrical & Controls Group					
21	Fan Center, W-R 8A03A-6, (Controls Induced Blower)	N/A	N/A	N/A	N/A	N/A
21	Fan Center, Honeywell R8239D1007, (Alternate), (Controls Induced Blower)	N/A	N/A	N/A	N/A	N/A
	Relay, Induced Blower, SPST, 24v Coil, 9400-11Q	27739	27739	27739	27739	27739
22	Intermittent Spark Ignition Control, Honeywell S8600H3002B	21452	21452	21452	21452	21452
	Electrode Cable, Honeywell 392286-1, *Raj x Raj*	18893	18893	18893	18893	18893
	Electrode Cable, Honeywell 394801-20, *Raj x 1/4" Quick-Connect*	21455	21455	21455	21455	21455
23	Fan / Limit Control, 11½" Insertion, L4064B2723B or L6064A1003B	N/A	N/A	N/A	N/A	N/A
24	Flame Roll-Out Switch, 350°F, 10H14-2123 212321 Capillary Type	2012036	2012036	2012036	2012036	2012036
	Bracket, Flame Roll-Out Switch	N/A	N/A	N/A	N/A	N/A
25	Junction Box	21318	21318	21318	21318	21318
	Junction Box Cover	3011160A	3011160A	3011160A	3011160A	3011160A
	Fan Center, Tyco 1-1611760-0-57-01 V18BC4E231	27740	27740	27740	27740	27740
	Fan Center Replacement Relay, SPDT, Tyco 9400-04Q1999	27767	27767	27767	27767	27767
	Door Switch, 2609-1010	N/A	N/A	N/A	N/A	N/A
26	Pressure Switch, + 0.20" w.c., XO8153, (FS6116-659)	20649	20649	20649	20649	20649
26	Pressure Switch, + 0.35" w.c., FS6116-3087	17990	17990	17990	17990	17990
26	Pressure Switch, - 0.55" w.c., MPL 9370-V	28308	28308	28308	28308	28308
27	Vent Limit Switch, 250°F, Therm-O-Disc 60T25L250, 330733, *see notes*	11060	11060	11060	11060	11060
28	Fan Relay, SPDT, 24V Coil, 9400-04Q1999	27767	27767	27767	27767	27767
	Transformer, 120 / 24 v, 40 VA, BE161640REK0028	550001533	550001533	550001533	550001533	550001533

HMS Series, Mid-Efficiency Upflow Gas-Fired Furnace, (Original) - Challenger (Canada), UltraSave (United States).						
Ref. No.	**Description**	**HMS-52**	**HMS-72**	**HMS-90 Cdn**	**HMS-90 U.S.**	**HMS-100H**
	Terminal Block, 5-Post	N/A	N/A	N/A	N/A	N/A
	Fuse, Buss MTH 4 Amp, 250v	N/A	N/A	N/A	N/A	N/A
	In-Line Fuse Holder Assembly, HDJ-B	N/A	N/A	N/A	N/A	N/A
	Burner Group					
	Inshot Burners, Intermittent Spark, Nat. Gas Only					
29	Gas Valve, Honeywell VR8204A2175/B	14662052	14662052	14662052	14662052	14662052
30	Manifold Assembly	N/A	N/A	N/A	N/A	N/A
31	Burner Orifice, NG, No. 36 DMS	- - -	- - -	- - -	- - -	N/A
31	Burner Orifice, NG, No. 38 DMS	- - -	- - -	- - -	- - -	- - -
31	Burner Orifice, NG, No. 39 DMS	- - -	- - -	3051096B (3)	3051096B (3)	- - -
31	Burner Orifice, NG, No. 40 DMS	- - -	- - -	- - -	- - -	- - -
31	Burner Orifice, NG, No. 42 DMS	N/A	N/A	- - -	- - -	- - -
32	Pilot Burner Assembly, Honeywell Q345A1024B	1380004	1380004	1380004	1380004	1380004
	Pilot Orifice, NG, BCR-18, Honeywell H390686-4	21407	21407	21407	21407	21407
	Pilot Bracket	15179	15179	15179	15179	15179
	Pilot Tubing, 23", 0.25" O.D. x 0.032 Aluminium	1140146	1140146	1140146	1140146	1140146
33	Air Shutter	N/A	N/A	N/A	N/A	N/A
34	Air Shutter Spring	2160078 (2)	2160078 (3)	2160078 (3)	2160078 (3)	2160078 (3)
35	Inshot Burner, Left	- - -	N/A	N/A	N/A	N/A
35	Inshot Burner, Center	N/A	N/A	N/A	N/A	N/A
35	Inshot Burner, Right	- - -	N/A	N/A	N/A	N/A
13	Flame Shield	N/A	N/A	N/A	N/A	N/A
14	Burner Bottom Shield	N/A	N/A	N/A	N/A	N/A
	Inshot to BSI Ribbon Burner Conversion Kit	29235	N/A	N/A	N/A	N/A
	BSI Ribbon Burners, Intermittent Spark, NG or LP Gas					
29	Gas Valve, Honeywell VR8204A2175/B	14662052	14662052	14662052	14662052	14662052
29	Gas Valve, LP, Honeywell VR8204A2043B	18603	18603	18603	18603	- - -
36	Manifold Assembly	N/A	N/A	N/A	N/A	N/A
31	Burner Orifice, NG, No. 36 DMS	- - -	- - -	- - -	- - -	N/A
31	Burner Orifice, NG, No. 38 DMS	- - -	- - -	- - -	- - -	- - -
31	Burner Orifice, NG, No. 39 DMS	- - -	- - -	3051096B (3)	3051096B (3)	- - -

HMS Series, Mid-Efficiency Upflow Gas-Fired Furnace, (Original) - Challenger (Canada), UltraSave (United States).						
Ref. No.	**Description**	**HMS-52**	**HMS-72**	**HMS-90 Cdn**	**HMS-90 U.S.**	**HMS-100H**
31	Burner Orifice, NG, No. 40 DMS	- - -	- - -	- - -	- - -	- - -
31	Burner Orifice, NG, No. 42 DMS	N/A	N/A	- - -	- - -	- - -
31	Burner Orifice, LP, No. 53 DMS	- - -	- - -	3051111B (3)	- - -	- - -
31	Burner Orifice, LP, No. 54 DMS	N/A	N/A	N/A	- - -	- - -
31	Burner Orifice, LP, 1.32 mm, U.S. Models	N/A	- - -	- - -	- - -	- - -
31	Burner Orifice, LP, 1.59 mm, U.S. Models	- - -	- - -	- - -	- - -	- - -
31	Burner Orifice, LP, 1.60 mm, U.S. Models	- - -	- - -	- - -	N/A	- - -
32	Pilot Burner Assembly, Honeywell Q345A1024B	1380004	1380004	1380004	1380004	1380004
	Pilot Orifice, NG, BCR-18, Honeywell H390686-4	21407	21407	21407	21407	21407
	Pilot Orifice, LP, BBR-12, Honeywell 390686-25	2012100A	2012100A	2012100A	2012100A	- - -
	Pilot Bracket	3051060A	3051060A	3051060A	3051060A	3051060A
	Pilot Tubing, 23", 0.25" O.D. x 0.032 Aluminium	1140146	1140146	1140146	1140146	1140146
37	BSI Ribbon Burner Assembly	16725	10741	10741	10741	10741
15	Flame Shield	N/A	N/A	N/A	N/A	N/A
16	Burner Bottom Shield	N/A	N/A	N/A	N/A	N/A
	Venting Group					
38	Induced Blower Assembly Replacement Kit (Chimney Vent)	26986	26986	26986	26986	26986
38	Induced Blower Assembly Replacement Kit (Sidewall Vent)	26171	26171	26171	26171	26171
39	Induced Blower Gasket	21873	21873	21873	21873	21873
40	Flue Orifice, 1-1/16"	N/A	- - -	- - -	- - -	- - -
40	Flue Orifice, 1-1/8"	N/A	- - -	- - -	- - -	- - -
40	Flue Orifice, 1-3/16"	N/A	N/A	- - -	- - -	- - -
40	Flue Orifice, 1-1/4"	- - -	N/A	- - -	- - -	- - -
40	Flue Orifice, 1-5/16"	- - -	N/A	- - -	N/A	- - -
40	Flue Orifice, 1-3/8"	- - -	- - -	N/A	N/A	- - -
40	Flue Orifice, 1-7/16"	- - -	- - -	N/A	- - -	- - -
40	Flue Orifice, 1-1/2"	- - -	- - -	- - -	- - -	- - -
40	Flue Orifice, 1-9/16"	- - -	- - -	- - -	- - -	N/A
40	Flue Orifice, 1-5/8"	- - -	- - -	- - -	- - -	- - -
40	Flue Orifice, 1-11/16"	- - -	- - -	- - -	- - -	- - -
40	Flue Orifice, 1-3/4"					
40	Flue Orifice, 1-13/16"	- - -	- - -	- - -	- - -	- - -
40	Flue Orifice, 1-7/8"	- - -	- - -	- - -	- - -	- - -

HMS Series, Mid-Efficiency Upflow Gas-Fired Furnace, (Original) - Challenger (Canada), UltraSave (United States).						
Ref. No.	**Description**	**HMS-52**	**HMS-72**	**HMS-90 Cdn**	**HMS-90 U.S.**	**HMS-100H**
41	Vent Box Assembly	N/A	N/A	N/A	N/A	N/A
	Silicone Tubing, 3¾", (*to IBR*), SR200 1/8" I.D., Clear	11344	11344	11344	11344	11344
	Miscellaneous Group					
	Air Filter, Permanent, 16 x 20 x 1	2180026	2180026	2180026	2180026	2180026
	Air Filter, Permanent, 16 x 25 x 1	- - -	- - -	- - -	- - -	- - -
	Installation, Operation & Maintenance Manual - Canada	N/A	N/A	N/A	- - -	N/A
	Installation, Operation & Maintenance Manual - United States	N/A	N/A	- - -	N/A	- - -
	User's Manual - United States	N/A	N/A	- - -	N/A	- - -
	P/N 26986 Induced Blower Replacement Kit Contents:					
	16-inches, Tube, Silicone, SR200, 1/8" I.D., Clear					
	4 Screws, No. 10 x 3/4, Hex-head / slot with shoulder.					
	2 Combustion Blower Gasket					
	1 Wire, 24", 16 Gauge AWG, 1 St 1/4" QC with Heat Shrink, 1 bare end					
	1 Induced Blower, JA1M209N					
	1 Back Plate with 1.5" I.D. Orifice					
	1 Pressure Switch, - 0.55" w.c., 9300-V N/O					
	1 Hose Barb, Brass, 48P122-7, 0.38" Insertion					
	1 Speed-Nut, No. 2102					
	1 Installation Instructions for Kit No. 26986					
	Note: This kit is not intended fore use with HMS-130 or HMS-145					

	HMS Series, Mid-Efficiency Upflow Gas-Fired Furnace, (Original					
Ref. No.	**Description**	**HMS-105**	**HMS-115A**	**HMS-120**	**HMS-130H**	**HMS-145**
	Sheet Metal Group					
1	Heat Exchanger Assembly	N/A	N/A	N/A	N/A	N/A
2	Left Side Panel Assembly	N/A	N/A	N/A	N/A	N/A
3	Right Side Panel Assembly	N/A	N/A	N/A	N/A	N/A
4	Rear Panel Assembly	N/A	N/A	N/A	N/A	N/A
5	Base Panel	N/A	N/A	N/A	N/A	N/A
6	Blower Division Panel Assembly	N/A	N/A	N/A	N/A	N/A
7	Inner Front Panel Assembly	N/A	N/A	N/A	N/A	N/A
8	Door Hanger Channel	N/A	N/A	N/A	N/A	N/A
9	Upper Front Door	N/A	N/A	N/A	N/A	N/A
10	Blower Access Door	N/A	N/A	N/A	N/A	N/A
11	Collection Box	N/A	N/A	N/A	N/A	N/A
12	Collection Box Gasket	N/A	N/A	N/A	N/A	N/A
13	Heat Shield, Inshot Burners	N/A	N/A	N/A	N/A	N/A
14	Bottom Shield	N/A	N/A	N/A	N/A	N/A
15	Heat Shield, BSI Burners	N/A	N/A	N/A	- - -	N/A
16	Bottom Shield, BSI Burners	N/A	N/A	N/A	- - -	N/A
	Filter Frame Assembly, 16 x 20 x 1	N/A	N/A	N/A	N/A	- - -
	Filter Frame Assembly, 16 x 25 x 1	- - -	- - -	- - -	- - -	18020
	Filter Frame End Support, 16 x 20	N/A	N/A	N/A	N/A	- - -
	Filter Frame End Support, 16 x 25	- - -	- - -	- - -	- - -	5592B2
	Blower Group - Direct Drive					
	Blower Assembly, Complete	N/A	N/A	N/A	N/A	N/A
17	Blower Housing and Wheel, 9-4, Airdex DC916-416-5	- - -	- - -	- - -	- - -	- - -
17	Blower Housing and Wheel, 9-6, Airdex DC916-600-5	- - -	- - -	- - -	- - -	- - -
17	Blower Housing and Wheel, 9-9, Delhi G9-DD, 9002002	28754	28754	28754	28754	- - -
17	Blower Housing and Wheel, DDMorrison 100-10R DD Special	- - -	- - -	- - -	- - -	30624
	Blower Wheel, 9-4 Direct Drive	- - -	- - -	- - -	- - -	- - -
	Blower Wheel, Airdex CM916-600, 5014731	- - -	- - -	- - -	- - -	- - -
	Blower Wheel, Delhi 9-9 DD, or Airdex CM916-916	N/A	N/A	N/A	N/A	- - -
	Blower Wheel, CM1020-1020	- - -	- - -	- - -	- - -	26430
18	Blower Motor, 1/4 hp, 4-Speed, Direct Drive, AOS Cat. No. 752	- - -	- - -	- - -	- - -	- - -

	HMS Series, Mid-Efficiency Upflow Gas-Fired Furnace, (Original					
Ref. No.	**Description**	**HMS-105**	**HMS-115A**	**HMS-120**	**HMS-130H**	**HMS-145**
18	Blower Motor, 1/3 hp, 4-Speed, Direct Drive, AOS OLE1036	550001987	550001987	550001987	550001987	- - -
18	Blower Motor, 1/2 hp, 4-Speed, Direct Drive, G.E. 5KCP39LGY723BS	- - -	- - -	- - -	- - -	102000131
	Alt: Blower 1/2 HP Motor Kit W/ Mounting Hardware, No Capacitor	- - -	- - -	- - -	- - -	27836
	Alt: Blower 1/2 HP Motor Kit W/ Capacitor, No Hardware	- - -	- - -	- - -	- - -	550001530
	Blower Motor Mounting Band	17811	17811	17811	17811	17811
	Blower Motor Mounting Arm, (*3 Required*)	26250	26250	26250	26250	26251
19	Capacitor, 5 mfd@370 vac, M22P3705M00	27741	27741	27741	27741	- - -
19	Capacitor, 7.5 mfd@370 vac, M22P3707M00	- - -	- - -	- - -	- - -	27742
19	Capacitor, 10 mfd@370 vac, M22P3710M00	- - -	- - -	- - -	- - -	27743
19	Capacitor, 12.5 mfd@370 vac, M22P3712N00	27744	27744	27744	27744	- - -
	Capacitor Insulator, 44603-0009	27769	27769	27769	27769	27769
	Capacitor Strap, 51045-0013	27760	27760	27760	27760	27760
20	Blower Mounting Rail, (*2 Required*)	N/A	N/A	N/A	N/A	N/A
	Blower Group - Belt Drive					
	Blower Assembly, Complete	N/A	N/A	- - -	N/A	N/A
	Blower Housing and Wheel, Delhi G10-5	- - -	- - -	- - -	- - -	- - -
	Blower Housing and Wheel, Delhi G10-8	10436	10436	- - -	10436	- - -
	Blower Housing and Wheel, Delhi G10	- - -	- - -	- - -	- - -	30625
	Blower Wheel, 10-5	- - -	- - -	- - -	- - -	- - -
	Blower Wheel, 10-8, Airdex CL1020-800, 5014672	N/A	N/A	- - -	N/A	- - -
	Blower Wheel, 10-10, Delhi 6039004	- - -	- - -	- - -	- - -	26589
	Blower Motor, 1/4 hp, Single-Speed	N/A	N/A	- - -	N/A	- - -
	Blower Motor, 1/3 hp, Single-Speed	102000153	102000153	- - -	102000153	102000153
	Blower Motor, 1/2 hp, Single-Speed	- - -	- - -	- - -	- - -	102000154
	Blower Motor, 1/4 hp, Two-Speed	N/A	N/A	- - -	N/A	- - -
	Blower Motor, 1/3 hp, Two-Speed	N/A	N/A	- - -	N/A	N/A
	Blower Motor, 1/2 hp, Two-Speed	- - -	- - -	- - -	- - -	28008
	Motor Pulley, 3¼ x ½, Variable Speed	2240001	2240001	- - -	2240001	2240001
	Blower Pulley, 8 x ¾	- - -	- - -	- - -	- - -	- - -
	Blower Pulley, 7 x ¾	2240008	2240008	- - -	2240008	- - -
	Blower Pulley, 6 x ¾	- - -	- - -	- - -	- - -	2240006
	Blower Pulley, 5 x ¾	2240005	2240005	- - -	2240005	2240005
	Fan Belt, 4L350	2240065	2240065	- - -	2240065	2240065
	Fan Belt, 4L360	N/A	N/A	- - -	N/A	N/A

	HMS Series, Mid-Efficiency Upflow Gas-Fired Furnace, (Original					
Ref. No.	**Description**	**HMS-105**	**HMS-115A**	**HMS-120**	**HMS-130H**	**HMS-145**
	Fan Belt, 4L370	- - -	- - -	- - -	- - -	- - -
	Fan Belt, 4L380	2240017	2240017	- - -	2240017	2240017
	Fan Belt, 4L390	N/A	N/A	- - -	N/A	- - -
	Fan Belt, 4L400	- - -	- - -	- - -	- - -	- - -
	Blower Bearing, Delhi, # 8 - ¾ Sleeve, 8100013, (*2 Required*)	2040036	2040036	- - -	2040036	2040036
	Blower Bearing Rubber Sleeve, Delhi, # 16 - ¾, 8860019, (*2 Required*)	12982	12982	- - -	12982	12982
	Bearing Bracket	28210	28210	- - -	28210	28210
	Blower Shaft	N/A	N/A	- - -	N/A	2041042
	Thrust Collar, Delhi 6000021, 3/4"	28094	28094	- - -	28094	28094
	Thrust Spacer	npn	npn	- - -	npn	npn
	Motor Mounting Bracket	npn	npn	- - -	npn	npn
	Blower Mounting Rail, (*2 Required*)	N/A	N/A	- - -	N/A	N/A
	Electrical & Controls Group					
21	Fan Center, W-R 8A03A-6, (Controls Induced Blower)	N/A	N/A	N/A	N/A	N/A
21	Fan Center, Honeywell R8239D1007, (Alternate), (Controls Induced Blower)	N/A	N/A	N/A	N/A	N/A
	Relay, Induced Blower, SPST, 24v Coil, 9400-11Q	27739	27739	27739	27739	27739
22	Intermittent Spark Ignition Control, Honeywell S8600H3002B	21452	21452	21452	21452	21452
	Electrode Cable, Honeywell 392286-1, *Raj x Raj*	18893	18893	18893	18893	18893
	Electrode Cable, Honeywell 394801-20, *Raj x 1/4" Quick-Connect*	21455	21455	21455	21455	21455
23	Fan / Limit Control, 11½" Insertion, L4064B2723B or L6064A1003B	N/A	N/A	N/A	N/A	N/A
24	Flame Roll-Out Switch, 350°F, 10H14-2123 212321 Capillary Type	2012036	2012036	2012036	2012036	2012036
	Bracket, Flame Roll-Out Switch	N/A	N/A	N/A	N/A	N/A
25	Junction Box	21318	21318	21318	21318	21318
	Junction Box Cover	3011160A	3011160A	3011160A	3011160A	3011160A
	Fan Center, Tyco 1-1611760-0-57-01 V18BC4E231	27740	27740	27740	27740	27740
	Fan Center Replacement Relay, SPDT, Tyco 9400-04Q1999	27767	27767	27767	27767	27767
	Door Switch, 2609-1010	N/A	N/A	N/A	N/A	N/A
26	Pressure Switch, + 0.20" w.c., XO8153, (FS6116-659)	20649	20649	20649	20649	20649
26	Pressure Switch, + 0.35" w.c., FS6116-3087	17990	17990	17990	17990	17990
26	Pressure Switch, - 0.55" w.c., MPL 9370-V	28308	28308	28308	- - -	- - -
27	Vent Limit Switch, 250°F, Therm-O-Disc 60T25L250, 330733, *see notes*	11060	11060	11060	11060	11060
28	Fan Relay, SPDT, 24V Coil, 9400-04Q1999	27767	27767	27767	27767	27767
	Transformer, 120 / 24 v, 40 VA, BE161640REK0028	550001533	550001533	550001533	550001533	550001533

	HMS Series, Mid-Efficiency Upflow Gas-Fired Furnace, (Original					
Ref. No.	**Description**	**HMS-105**	**HMS-115A**	**HMS-120**	**HMS-130H**	**HMS-145**
	Terminal Block, 5-Post	N/A	N/A	N/A	N/A	N/A
	Fuse, Buss MTH 4 Amp, 250v	N/A	N/A	N/A	N/A	N/A
	In-Line Fuse Holder Assembly, HDJ-B	N/A	N/A	N/A	N/A	N/A
	Burner Group					
	Inshot Burners, Intermittent Spark, Nat. Gas Only					
29	Gas Valve, Honeywell VR8204A2175/B	14662052	14662052	14662052	14662052	14662052
30	Manifold Assembly	N/A	N/A	N/A	N/A	N/A
31	Burner Orifice, NG, No. 36 DMS	- - -	- - -	- - -	N/A	- - -
31	Burner Orifice, NG, No. 38 DMS	- - -	- - -	3051100B (4)	- - -	- - -
31	Burner Orifice, NG, No. 39 DMS	- - -	- - -	- - -	- - -	3051096B (5)
31	Burner Orifice, NG, No. 40 DMS	- - -	3051097B (4)	- - -	- - -	- - -
31	Burner Orifice, NG, No. 42 DMS	N/A	- - -	- - -	- - -	- - -
32	Pilot Burner Assembly, Honeywell Q345A1024B	1380004	1380004	1380004	1380004	1380004
	Pilot Orifice, NG, BCR-18, Honeywell H390686-4	21407	21407	21407	21407	21407
	Pilot Bracket	15179	15179	15179	15179	15179
	Pilot Tubing, 23", 0.25" O.D. x 0.032 Aluminium	1140146	1140146	1140146	1140146	1140146
33	Air Shutter	N/A	N/A	N/A	N/A	N/A
34	Air Shutter Spring	2160078 (4)	2160078 (4)	2160078 (4)	2160078 (4)	2160078 (5)
35	Inshot Burner, Left	N/A	N/A	N/A	N/A	N/A
35	Inshot Burner, Center	N/A	N/A	N/A	N/A	N/A
35	Inshot Burner, Right	N/A	N/A	N/A	N/A	N/A
13	Flame Shield	N/A	N/A	N/A	N/A	N/A
14	Burner Bottom Shield	N/A	N/A	N/A	N/A	N/A
	Inshot to BSI Ribbon Burner Conversion Kit	N/A	N/A	N/A	- - -	- - -
	BSI Ribbon Burners, Intermittent Spark, NG or LP Gas					
29	Gas Valve, Honeywell VR8204A2175/B	14662052	14662052	14662052	14662052	14662052
29	Gas Valve, LP, Honeywell VR8204A2043B	18603	18603	18603	- - -	18603
36	Manifold Assembly	N/A	N/A	N/A	N/A	N/A
31	Burner Orifice, NG, No. 36 DMS	- - -	- - -	- - -	N/A	- - -
31	Burner Orifice, NG, No. 38 DMS	- - -	- - -	3051100B (4)	- - -	- - -
31	Burner Orifice, NG, No. 39 DMS	- - -	- - -	- - -	- - -	3051096B (5)

	HMS Series, Mid-Efficiency Upflow Gas-Fired Furnace, (Original					
Ref. No.	**Description**	**HMS-105**	**HMS-115A**	**HMS-120**	**HMS-130H**	**HMS-145**
31	Burner Orifice, NG, No. 40 DMS	- - -	3051097B (4)	- - -	- - -	- - -
31	Burner Orifice, NG, No. 42 DMS	N/A	- - -	- - -	- - -	- - -
31	Burner Orifice, LP, No. 53 DMS	- - -	3051111B (4)	- - -	- - -	3051111B (5)
31	Burner Orifice, LP, No. 54 DMS	N/A	- - -	- - -	- - -	- - -
31	Burner Orifice, LP, 1.32 mm, U.S. Models	N/A	- - -	- - -	- - -	- - -
31	Burner Orifice, LP, 1.59 mm, U.S. Models	- - -	- - -	- - -	- - -	N/A
31	Burner Orifice, LP, 1.60 mm, U.S. Models	- - -	- - -	N/A (4)	- - -	- - -
32	Pilot Burner Assembly, Honeywell Q345A1024B	1380004	1380004	1380004	1380004	1380004
	Pilot Orifice, NG, BCR-18, Honeywell H390686-4	21407	21407	21407	21407	21407
	Pilot Orifice, LP, BBR-12, Honeywell 390686-25	2012100A	2012100A	2012100A	- - -	2012100A
	Pilot Bracket	3051060A	3051060A	3051060A	3051060A	3051060A
	Pilot Tubing, 23", 0.25" O.D. x 0.032 Aluminium	1140146	1140146	1140146	1140146	1140146
37	BSI Ribbon Burner Assembly	16726	16726	16726	16726	16727
15	Flame Shield	N/A	N/A	N/A	N/A	N/A
16	Burner Bottom Shield	N/A	N/A	N/A	N/A	N/A
	Venting Group					
38	Induced Blower Assembly Replacement Kit (Chimney Vent)	26986	26986	26986	26171	26171
38	Induced Blower Assembly Replacement Kit (Sidewall Vent)	26171	26171	26171	26171	26171
39	Induced Blower Gasket	21873	21873	21873	21873	21873
40	Flue Orifice, 1-1/16"	- - -	- - -	- - -	- - -	- - -
40	Flue Orifice, 1-1/8"	- - -	- - -	- - -	- - -	- - -
40	Flue Orifice, 1-3/16"	- - -	- - -	- - -	- - -	- - -
40	Flue Orifice, 1-1/4"	- - -	- - -	- - -	- - -	- - -
40	Flue Orifice, 1-5/16"	- - -	- - -	- - -	- - -	- - -
40	Flue Orifice, 1-3/8"	- - -	- - -	- - -	- - -	- - -
40	Flue Orifice, 1-7/16"	- - -	- - -	- - -	- - -	- - -
40	Flue Orifice, 1-1/2"	N/A	- - -	- - -	- - -	- - -
40	Flue Orifice, 1-9/16"	N/A	- - -	- - -	- - -	- - -
40	Flue Orifice, 1-5/8"	N/A	- - -	N/A	- - -	- - -
40	Flue Orifice, 1-11/16"	- - -	N/A	N/A	- - -	- - -
40	Flue Orifice, 1-3/4"	- - -	N/A	- - -	N/A	N/A
40	Flue Orifice, 1-13/16"	- - -	- - -	- - -	- - -	N/A
40	Flue Orifice, 1-7/8"	- - -	- - -	- - -	- - -	N/A

	HMS Series, Mid-Efficiency Upflow Gas-Fired Furnace, (Original					
Ref. No.	**Description**	**HMS-105**	**HMS-115A**	**HMS-120**	**HMS-130H**	**HMS-145**
41	Vent Box Assembly	N/A	N/A	N/A	N/A	N/A
	Silicone Tubing, 3¾", (*to IBR*), SR200 1/8" I.D., Clear	11344	11344	11344	11344	11344
	Miscellaneous Group					
	Air Filter, Permanent, 16 x 20 x 1	2180026	2180026	2180026	2180026	- - -
	Air Filter, Permanent, 16 x 25 x 1	- - -	- - -	- - -	- - -	2180023
	Installation, Operation & Maintenance Manual - Canada	N/A	N/A	- - -	N/A	N/A
	Installation, Operation & Maintenance Manual - United States	N/A	- - -	N/A	- - -	N/A
	User's Manual - United States	N/A	- - -	N/A	- - -	N/A
	P/N 26986 Induced Blower Replacement Kit Contents:					
	16-inches, Tube, Silicone, SR200, 1/8" I.D., Clear					
	4 Screws, No. 10 x 3/4, Hex-head / slot with shoulder.					
	2 Combustion Blower Gasket					
	1 Wire, 24", 16 Gauge AWG, 1 St 1/4" QC with Heat Shrink, 1 bare end					
	1 Induced Blower, JA1M209N					
	1 Back Plate with 1.5" I.D. Orifice					
	1 Pressure Switch, - 0.55" w.c., 9300-V N/O					
	1 Hose Barb, Brass, 48P122-7, 0.38" Insertion					
	1 Speed-Nut, No. 2102					
	1 Installation Instructions for Kit No. 26986					
	Note: This kit is not intended fore use with HMS-130 or HMS-145					

HMS Series, Mid-Efficiency Upflow Gas-Fired Furnace, (Original) - Challenger (Canada), UltraSave (United States).

Specifications

Natural Gas and Propane:

Model	Ratings BTU/HR		Main Blower DD	External Static Pressure DD				Main Blower BD	External Static Pressure BD				Cooling Capacity			A.F.U.E. %
				.25 W.C.		.50 W.C.			.25 W.C.		.50 W.C.		E.S.P. .50 W.C.			
	Input	Output		Drive	Motor	Drive	Motor		Drive	Motor	Drive	Motor	Tons	H.P.	CFM Range	
HMS 52	52,200	42,400	9-4	LO	1/4	HI	1/4	10-4	3¼ x 8 x 39	1/4	3¼ x 6 x 37	1/4	1½	1/4	400 - 600	83.0
HMS 72	72,000	58,800	9-6	LO	1/4	HI	1/4	10-4	3¼ x 7 x 38	1/4	3¼ x 5 x 35	1/4	2 - 2½	1/4	600 - 1000	83.0
HMS 90	90,000	72,900	9-6	MED	1/4	HI	1/4	10-4	3¼ x 6 x 37	1/4	3¼ x 5 x 35	1/3	2 - 2½	1/4	600 - 1000	83.0
HMS 100	100,000	80,000	9-6	MED	1/4	HI	1/4	10-4	3¼ x 6 x 37	1/4	3¼ x 5 x 35	1/3	2 - 2½	1/4	600 - 1000	83.0
HMS 105	105,000	85,400	9-9	LO	1/3	HI	1/3	10-8	3¼ x 7 x 38	1/4	3¼ x 5 x 35	1/3	2 - 3	1/3	800 - 1200	83.0
HMS 115	115,000	93,300	9-9	LO	1/3	HI	1/3	10-8	3¼ x 7 x 38	1/4	3¼ x 5 x 35	1/3	2 - 3	1/3	800 - 1200	83.0
HMS 130	130,000	104,000	9-9	MED	1/3	HI	1/3	10-8	3¼ x 7 x 38	1/4	3¼ x 5 x 35	1/3	2 - 3	1/3	800 - 1200	N/L
HMS 145	145,000	117,500	10-10	LO	1/2	HI	1/2	10-10	3¼ x 6 x 37	1/3	3¼ x 5 x 35	1/2	3 - 4	1/2	1000-1600	81.1

Dimensions

Model	Cabinet			Return Plenum (N x O)	Warm Air Plenum (ExD)	Flue Dia.	Filters (Permanent)	Clearances					Shipping WT. LBS.
	Width A	Depth B	HT. C					Top	Front	Sides	Back	Vent	
HMS 52	13½	28	51	14 x 18	12 x 18	4	16 x 20 x 1	1	6	1	0	6	165
HMS 72	13½	28	51	14 x 18	12 x 18	4	16 x 20 x 1	1	6	1	0	6	175
HMS 90	13½	28	51	14 x 18	12 x 18	4	16 x 20 x 1	1	6	1	0	6	175
HMS 100	13½	28	51	14 x 18	12 x 18	4	16 x 20 x 1	1	6	1	0	6	175
HMS 105	17½	28	51	14 x 18	16 x 18	4	16 x 20 x 1	1	6	1	0	6	205
HMS 115	17½	28	51	14 x 18	16 x 18	4	16 x 20 x 1	1	6	1	0	6	205
HMS 130	17½	28	51	14 x 18	16 x 18	4	16 x 20 x 1	1	6	1	0	6	205
HMS 145	21½	28	51	14 x 22	20 x 18	4	16 x 25 x 1	1	6	1	0	6	235