MMB Series - Mid-Efficiency Multi-Positional Gas-Fired Furnace (Consolidated)

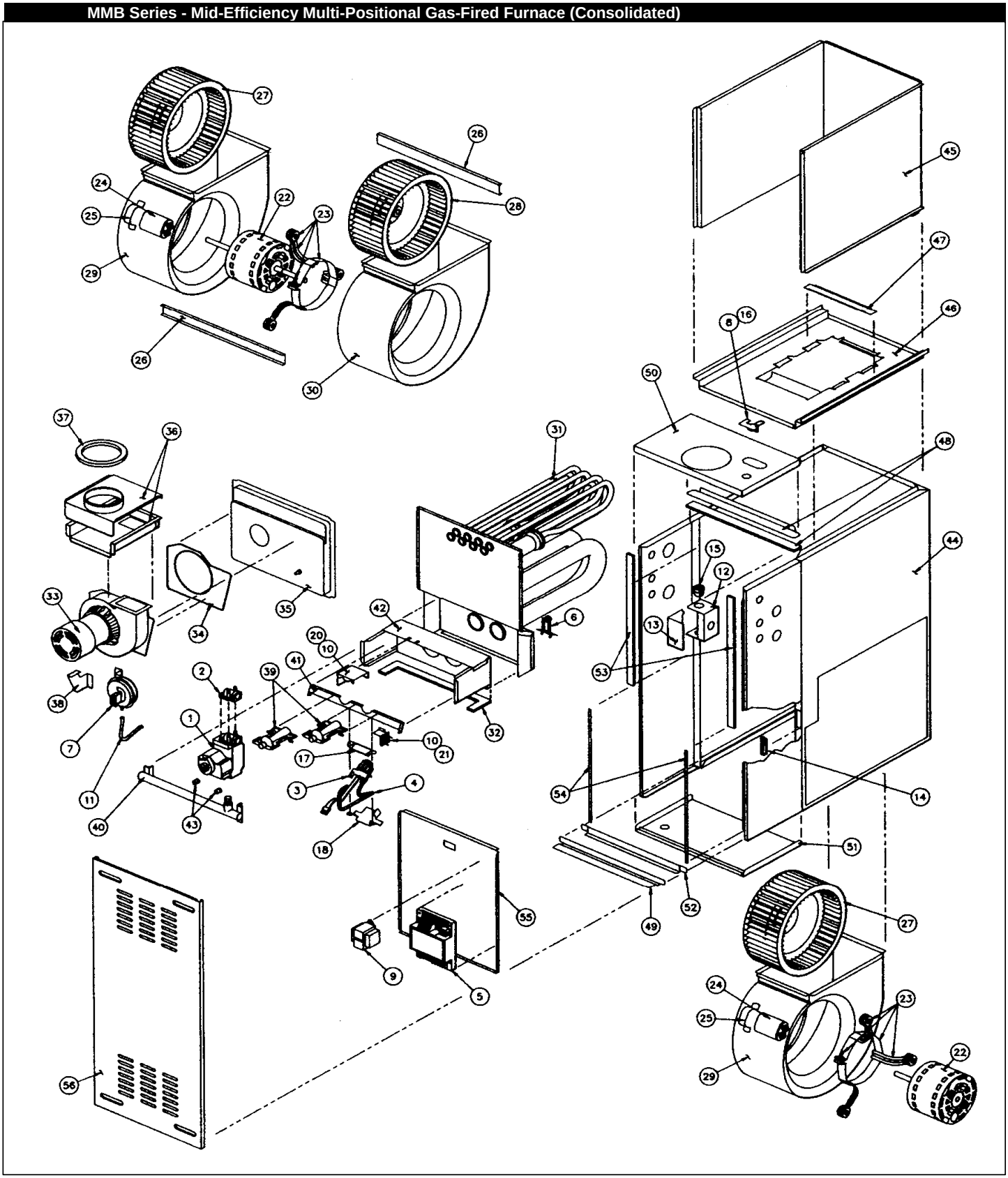

	MMB Series - Mid-Efficiency Multi-Positional Gas-Fired Furnace (Consolidated)								
		40000	40000	60000	60000	60000	80000	80000	80000
Ref #	**Description**	**MMB0401**	**MMB0402**	**MMB0601**	**MMB0602**	**MMB0603**	**MMB0801**	**MMB0802**	**MMB0803**
		1/4 hp	1/3 hp	1/4 hp	1/3 hp	1/2 hp	1/4 hp	1/3 hp	1/2 hp
	Consolidated Reference No.	040-2	040-3	060-2	060-3	060-4	080-2	080-3	080-4
	Controls Group								
1	Gas Control, Natural Gas, Honeywell SV9500M	C4211700	C4211700	C4211700	C4211700	C4211700	C4211700	C4211700	C4211700
2	Inlet Gas Connector	C4085300	C4085300	C4085300	C4085300	C4085300	C4085300	C4085300	C4085300
3	Pilot/Ignitor, Honeywell Q3450D	C4103200	C4103200	C4103200	C4103200	C4103200	C4103200	C4103200	C4103200
4	Pilot Tubing	N/A	N/A	N/A	N/A	N/A	N/A	N/A	N/A
	Electronic Group Controls								
5	Control Module, Honeywell ST9141A1002	C4116000	C4116000	C4116000	C4116000	C4116000	C4116000	C4116000	C4116000
6	Primary Limit Switch	C4035000	C4035001	C4035000	C4035001	C4035001	C4035001	C4035000	C4035001
7	Pressure Switch	C4026900	C4026900	C4026900	C4026900	C4026900	C4026900	C4026900	C4026900
8	Power Disconnect	N/A	N/A	N/A	N/A	N/A	N/A	N/A	N/A
9	Transformer, 40VA	C4100800	C4100800	C4100800	C4100800	C4100800	C4100800	C4100800	C4100800
10	Burner Limit Switch	C4035300	C4035300	C4035300	C4035300	C4035300	C4035300	C4035300	C4035300
	Hardware								
11	Pressure Switch Tubing	N/A	N/A	N/A	N/A	N/A	N/A	N/A	N/A
12	Junction Box	N/A	N/A	N/A	N/A	N/A	N/A	N/A	N/A
13	Junction Box Cover	N/A	N/A	N/A	N/A	N/A	N/A	N/A	N/A
14	Hem Bushing	N/A	N/A	N/A	N/A	N/A	N/A	N/A	N/A
15	Strain Relief	N/A	N/A	N/A	N/A	N/A	N/A	N/A	N/A
16	Disconnect Bracket	N/A	N/A	N/A	N/A	N/A	N/A	N/A	N/A
17	Pilot Mounting Bracket	C408990	C408990	C408990	C408990	C408990	C408990	C408990	C408990
18	Pilot Shield	N/A	N/A	N/A	N/A	N/A	N/A	N/A	N/A
19	Wire Harness Kit (*not shown*)	C4101500	C4101500	C4101500	C4101500	C4101500	C4101500	C4101500	C4101500
20	Upper Burner Limit Switch Bracket	C401180	C401180	C401180	C401180	C401180	C401180	C401180	C401180
21	Lower Burner Limit Switch Bracket	N/A	N/A	C402250	C402250	C402250	C402250	C402250	C402250
	Blower Group								
	Blower Assembly	N/A	N/A	N/A	N/A	C4102802	N/A	N/A	C4102802
22	Blower Motor	N/A	C4101101	N/A	C4101101	C4101102	N/A	C4101101	C4101102
23	Motor Mounting Kit	C4038701	C4038701	C4038701	C4038701	C4038700	C4038701	C4038701	C4038700
24	Capacitor	C4036000	C4036000	C4036000	C4036000	C4036000	C4036000	C4036000	C4036000
25	Capacitor Strap	N/A	N/A	N/A	N/A	N/A	N/A	N/A	N/A
26	Blower Housing Support	N/A	N/A	N/A	N/A	N/A	N/A	N/A	N/A
27	Blower Wheel, Direct Drive, (Convex)	C4039500	C4039502	C4039500	C4039502	C4039504	C4039500	C4039502	C4039504
28	Blower Wheel, Direct Drive, (Concave)	N/A	N/A	N/A	N/A	N/A	N/A	N/A	N/A

	MMB Series - Mid-Efficiency Multi-Positional Gas-Fired Furnace (Consolidated)								
		40000	40000	60000	60000	60000	80000	80000	80000
Ref #	**Description**	**MMB0401**	**MMB0402**	**MMB0601**	**MMB0602**	**MMB0603**	**MMB0801**	**MMB0802**	**MMB0803**
		1/4 hp	1/3 hp	1/4 hp	1/3 hp	1/2 hp	1/4 hp	1/3 hp	1/2 hp
	Consolidated Reference No.	040-2	040-3	060-2	060-3	060-4	080-2	080-3	080-4
29	Blower Housing	N/A	C4102401	N/A	C4102401	C4102402	N/A	C4102401	C4102402
30	Blower Housing	N/A	N/A	N/A	N/A	N/A	N/A	N/A	N/A
	Heat Exchanger Group								
31	Heat Exchanger Assembly	N/A	N/A	N/A	N/A	N/A	N/A	N/A	N/A
32	Bottom Bulkhead Gasket	N/A	N/A	N/A	N/A	N/A	N/A	N/A	N/A
	Draft Inducer Group								
33	Draft Inducer Motor Assembly	C4026600	C4026600	C4026600	C4026600	C4026600	C4026600	C4026600	C4026600
34	Draft Inducer Motor Gasket	N/A	N/A	N/A	N/A	N/A	N/A	N/A	N/A
35	Inducer Pan Assembly	C401340	C401340	C401341	C401341	N/A	C401342	C401342	C4011344
36	Flue Box	N/A	N/A	C4042301	C4042301	C4042301	C4042301	C4042301	C4042301
37	Vent Gasket	N/A	N/A	N/A	N/A	N/A	N/A	N/A	N/A
38	Flue Box Support	C401320	C401320	C401320	C401320	C401320	C401320	C401320	C401320
	Burner Group								
39	Main Burner	C4036500	C4036500	C4036500	C4036500	C4036500	C4036500	C4036500	C4036500
40	Manifold	N/A	N/A	C400111	C400111	C400111	C400112	C400112	C400112
41	Main Burner Mount	N/A	N/A	N/A	N/A	N/A	N/A	N/A	N/A
42	Venturi Plate	N/A	N/A	C400682	C400682	N/A	N/A	N/A	N/A
43	Main Burner Orifices, Natural Gas	N/A	N/A	N/A	N/A	N/A	N/A	N/A	N/A
43	Main Burner Orifices, L.P. Gas	N/A	N/A	N/A	N/A	N/A	N/A	N/A	N/A
43	Main Burner Orifices, Cdn. High Altitude, Nat. Gas	C4041302	C4041302	C4041302	C4041302	C4041302	C4041302	C4041302	C4041302
43	Main Burner Orifices, Cdn. High Altitude, L.P. Gas	C403022	C403022	C403022	C403022	C403022	C403022	C403022	C403022
	Venturi & Manifold	N/A	N/A	N/A	N/A	N/A	N/A	N/A	N/A
	Casing Group								
44	Casing	N/A	N/A	N/A	N/A	N/A	N/A	N/A	N/A
45	Radiation Shield Assembly	N/A	N/A	N/A	N/A	N/A	N/A	N/A	N/A
46	Blower Deck	N/A	N/A	N/A	N/A	N/A	N/A	N/A	N/A
47	Air Baffle	N/A	N/A	N/A	N/A	N/A	N/A	N/A	N/A
48	Insulated Duct Flange	N/A	N/A	N/A	N/A	N/A	N/A	N/A	N/A
49	Door Channel	N/A	N/A	N/A	N/A	N/A	N/A	N/A	N/A
50	Top Plate Assembly	N/A	N/A	N/A	N/A	N/A	N/A	N/A	N/A
51	Base Panel	C400460	C400460	C400460	C400460	N/A	C400460	C400460	N/A
52	Base Support	N/A	N/A	N/A	N/A	N/A	N/A	N/A	N/A

	MMB Series - Mid-Efficiency Multi-Positional Gas-Fired Furnace (Consolidated)								
		40000	40000	60000	60000	60000	80000	80000	80000
Ref #	**Description**	**MMB0401**	**MMB0402**	**MMB0601**	**MMB0602**	**MMB0603**	**MMB0801**	**MMB0802**	**MMB0803**
		1/4 hp	1/3 hp	1/4 hp	1/3 hp	1/2 hp	1/4 hp	1/3 hp	1/2 hp
	Consolidated Reference No.	040-2	040-3	060-2	060-3	060-4	080-2	080-3	080-4
53	Hem Gaskets	N/A	N/A	N/A	N/A	N/A	N/A	N/A	N/A
54	Door Gaskets	N/A	N/A	N/A	N/A	N/A	N/A	N/A	N/A
	Accessory Group								
55	Blower Door (U.S.)	N/A	N/A	N/A	N/A	N/A	N/A	N/A	N/A
56	Outer Door (U.S.)	C4102000	C4102000	C4102000	C4102000	N/A	C4102000	C4102000	N/A
57	Bottom Closures (10) Upflow	C4045900	C4045900	C4045900	C4045900	C4045901	C4045900	C4045900	C4045901
58	Filters (10) 14 x 25 Upflow	N/A	N/A	N/A	N/A	N/A	N/A	N/A	N/A
59	Filters (10) 16 x 25 Upflow	N/A	N/A	N/A	N/A	N/A	N/A	N/A	N/A
60	Filters (10) 20 x 25 Upflow	N/A	N/A	N/A	N/A	N/A	N/A	N/A	N/A
61	Filters (10) 16 x 20 (All Downflow)	N/A	N/A	N/A	N/A	N/A	N/A	N/A	N/A
62	Combustion Floor Base (10) (Downflow)	N/A	N/A	N/A	N/A	N/A	N/A	N/A	N/A
63	Bottom Filter Box (Upflow)	C4046600	C4046600	C4046600	C4046600	C4046601	C4046600	C4046600	C4046601
64	Side Filter Cabinet (Upflow)	N/A	N/A	N/A	N/A	N/A	N/A	N/A	N/A
65	Downflow Filter Kit	N/A	N/A	N/A	N/A	N/A	N/A	N/A	N/A
66	Nat. to L.P. Conversion Kit (U.S.)	C4026300	C4026300	C4026300	C4026300	C4026300	C4026300	C4026300	C4026300
67	L.P. to Nat. Conversion Kit (U.S.)	C4038200	C4038200	C4038200	C4038200	C4038200	C4038200	C4038200	C4038200
68	California Nox Screen	N/A	N/A	N/A	N/A	N/A	N/A	N/A	N/A
69	High Altitude Kit, Above 6000 Feet	N/A	N/A	N/A	N/A	N/A	N/A	N/A	N/A
70	High Temperature Plastic Vent Support	C4099500	C4099500	C4099500	C4099500	C4099500	C4099500	C4099500	C4099500
71	Inducer Pan Kit	N/A	N/A	N/A	N/A	N/A	C4124200	C4124200	C4124201
	Nat. to L.P. Conversion Kit (Cdn.)								
	L.P. to Nat. Conversion Kit (Cdn.)								
	High Altitude Kit, Canada, 2000 - 4500 Feet	C4068300	C4068300	C4068300	C4068300	C4068300	C4068300	C4068300	C4068300

	MMB Series - Mid-Efficiency Multi-Positional Gas-								
		80000	100000	100000	100000	120000	120000	140000	140000
Ref #	**Description**	**MMB0804**	**MMB1001**	**MMB1002**	**MMB1003**	**MMB1201**	**MMB1202**	**MMB1401**	**MMB1402**
		3/4 hp	1/3 hp	1/2 hp	3/4 hp	1/2 hp	3/4 hp	3/4 hp	3/4 hp
	Consolidated Reference No.	080-5	100-3	100-4	100-5	120-4	120-5	140-4	140-5
	Controls Group								
1	Gas Control, Natural Gas, Honeywell SV9500M	C4211700	C4211700	C4211700	C4211700	C4211700	C4211700	C4211700	C4211700
2	Inlet Gas Connector	C4085300	C4085300	C4085300	C4085300	C4085300	C4085300	C4085300	C4085300
3	Pilot/Ignitor, Honeywell Q3450D	C4103200	C4103200	C4103200	C4103200	C4103200	C4103200	C4103200	C4103200
4	Pilot Tubing	N/A	N/A	N/A	N/A	N/A	N/A	N/A	N/A
	Electronic Group Controls								
5	Control Module, Honeywell ST9141A1002	C4116000	C4116000	C4116000	C4116000	C4116000	C4116000	C4116000	C4116000
6	Primary Limit Switch	C4035000	C4035001	C4035000	C4035000	C4035000	C4035000	C4035000	C4035001
7	Pressure Switch	C4026900	C4026900	C4026900	C4026900	C4026900	C4026900	C4026900	C4026900
8	Power Disconnect	N/A	N/A	N/A	N/A	N/A	N/A	N/A	N/A
9	Transformer, 40VA	C4100800	C4100800	C4100800	C4100800	C4100800	C4100800	C4100800	C4100800
10	Burner Limit Switch	C4035300	C4035300	C4035300	C4035300	C4035300	C4035300	C4035300	C4035300
	Hardware								
11	Pressure Switch Tubing	N/A	N/A	N/A	N/A	N/A	N/A	N/A	N/A
12	Junction Box	N/A	N/A	N/A	N/A	N/A	N/A	N/A	N/A
13	Junction Box Cover	N/A	N/A	N/A	N/A	N/A	N/A	N/A	N/A
14	Hem Bushing	N/A	N/A	N/A	N/A	N/A	N/A	N/A	N/A
15	Strain Relief	N/A	N/A	N/A	N/A	N/A	N/A	N/A	N/A
16	Disconnect Bracket	N/A	N/A	N/A	N/A	N/A	N/A	N/A	N/A
17	Pilot Mounting Bracket	C408990	C408990	C408990	C408990	C408990	C408990	C408990	C408990
18	Pilot Shield	N/A	N/A	N/A	N/A	N/A	N/A	N/A	N/A
19	Wire Harness Kit (*not shown*)	C4101500	C4101500	C4101500	C4101500	C4101500	C4101500	C4101500	C4101500
20	Upper Burner Limit Switch Bracket	C401180	C401180	C401180	C401180	C401180	C401180	C401180	C401180
21	Lower Burner Limit Switch Bracket	C402250	C402250	C402250	C402250	C402250	C402250	C402250	C402250
	Blower Group								
	Blower Assembly	C4102900	N/A	C4102802	C4102900	C4102802	C4102900	C4102900	C4102901
22	Blower Motor	N/A	C4101101	C4101102	N/A	C4101102	N/A	N/A	N/A
23	Motor Mounting Kit	C4038701	C4038701	C4038700	C4038701	C4038700	C4038701	C4038701	C4038701
24	Capacitor	C4036001	C4036000	C4036000	C4036001	C4036000	C4036001	C4036001	C4036001
25	Capacitor Strap	N/A	N/A	N/A	N/A	N/A	N/A	N/A	N/A
26	Blower Housing Support	N/A	N/A	N/A	N/A	N/A	N/A	N/A	N/A
27	Blower Wheel, Direct Drive, (Convex)	C4039500	C4039502	C4039504	C4039500	C4039504	C4039500	C4039500	C4039502
28	Blower Wheel, Direct Drive, (Concave)	C4039501	N/A	N/A	C4039501	N/A	C4039501	C4039501	N/A

	MMB Series - Mid-Efficiency Multi-Positional Gas-								
		80000	100000	100000	100000	120000	120000	140000	140000
Ref #	**Description**	**MMB0804**	**MMB1001**	**MMB1002**	**MMB1003**	**MMB1201**	**MMB1202**	**MMB1401**	**MMB1402**
		3/4 hp	1/3 hp	1/2 hp	3/4 hp	1/2 hp	3/4 hp	3/4 hp	3/4 hp
	Consolidated Reference No.	080-5	100-3	100-4	100-5	120-4	120-5	140-4	140-5
29	Blower Housing	N/A	C4102401	C4102402	N/A	C4102402	N/A	N/A	N/A
30	Blower Housing	C4102404	N/A	N/A	C4102404	N/A	C4102404	C4102404	N/A
	Heat Exchanger Group								
31	Heat Exchanger Assembly	N/A	N/A	N/A	N/A	N/A	N/A	N/A	N/A
32	Bottom Bulkhead Gasket	N/A	N/A	N/A	N/A	N/A	N/A	N/A	N/A
	Draft Inducer Group								
33	Draft Inducer Motor Assembly	C4026600	C4118300	C4118300	C4118300	C4118300	C4118300	C4118300	C4118300
34	Draft Inducer Motor Gasket	N/A	N/A	N/A	N/A	N/A	N/A	N/A	N/A
35	Inducer Pan Assembly	N/A	N/A	N/A	N/A	N/A	N/A	N/A	N/A
36	Flue Box	C4042301	C4042301	C4042301	C4042301	C4042302	C4042302	C4042302	C4042302
37	Vent Gasket	N/A	N/A	N/A	N/A	N/A	N/A	N/A	N/A
38	Flue Box Support	C401320	C401320	C401320	C401320	C401320	C401320	C401320	C401320
	Burner Group								
39	Main Burner	C4036500	C4036500	C4036500	C4036500	C4036500	C4036500	C4036500	C4036500
40	Manifold	C400112	C400113	C400113	C400113	N/A	N/A	N/A	N/A
41	Main Burner Mount	N/A	N/A	N/A	N/A	N/A	N/A	N/A	N/A
42	Venturi Plate	N/A	N/A	N/A	N/A	N/A	N/A	C400685	C400685
43	Main Burner Orifices, Natural Gas	N/A	N/A	N/A	N/A	N/A	N/A	N/A	N/A
43	Main Burner Orifices, L.P. Gas	N/A	N/A	N/A	N/A	N/A	N/A	N/A	N/A
43	Main Burner Orifices, Cdn. High Altitude, Nat. Gas	C4041302	C4041302	C4041302	C4041302	C4041302	C4041302	C4041302	C4041302
43	Main Burner Orifices, Cdn. High Altitude, L.P. Gas	C403022	C403022	C403022	C403022	C403022	C403022	C403022	C403022
	Venturi & Manifold	N/A	N/A	N/A	N/A	N/A	N/A	N/A	N/A
	Casing Group								
44	Casing	N/A	N/A	N/A	N/A	N/A	N/A	N/A	N/A
45	Radiation Shield Assembly	N/A	N/A	N/A	N/A	N/A	N/A	N/A	N/A
46	Blower Deck	N/A	N/A	N/A	N/A	N/A	N/A	N/A	N/A
47	Air Baffle	N/A	N/A	N/A	N/A	N/A	N/A	N/A	N/A
48	Insulated Duct Flange	C401672	N/A	N/A	C401672	C401672	C401672	N/A	N/A
49	Door Channel	N/A	N/A	N/A	N/A	N/A	N/A	N/A	N/A
50	Top Plate Assembly	N/A	N/A	N/A	N/A	C401686	C401686	N/A	N/A
51	Base Panel	N/A	N/A	N/A	N/A	N/A	N/A	C400463	C400463
52	Base Support	N/A	N/A	N/A	N/A	N/A	N/A	N/A	N/A

	MMB Series - Mid-Efficiency Multi-Positional Gas-								
		80000	100000	100000	100000	120000	120000	140000	140000
Ref #	**Description**	**MMB0804**	**MMB1001**	**MMB1002**	**MMB1003**	**MMB1201**	**MMB1202**	**MMB1401**	**MMB1402**
		3/4 hp	1/3 hp	1/2 hp	3/4 hp	1/2 hp	3/4 hp	3/4 hp	3/4 hp
	Consolidated Reference No.	080-5	100-3	100-4	100-5	120-4	120-5	140-4	140-5
53	Hem Gaskets	N/A	N/A	N/A	N/A	N/A	N/A	N/A	N/A
54	Door Gaskets	N/A	N/A	N/A	N/A	N/A	N/A	N/A	N/A
	Accessory Group								
55	Blower Door (U.S.)	N/A	N/A	N/A	N/A	N/A	N/A	N/A	N/A
56	Outer Door (U.S.)	C4102002	N/A	N/A	C4102002	C4102002	C4102002	N/A	N/A
57	Bottom Closures (10) Upflow	C4045902	C4045901	C4045901	C4045902	C4045902	C4045902	C4045903	C4045903
58	Filters (10) 14 x 25 Upflow	N/A	N/A	N/A	N/A	N/A	N/A	N/A	N/A
59	Filters (10) 16 x 25 Upflow	N/A	N/A	N/A	N/A	N/A	N/A	N/A	N/A
60	Filters (10) 20 x 25 Upflow	N/A	N/A	N/A	N/A	N/A	N/A	N/A	N/A
61	Filters (10) 16 x 20 (All Downflow)	N/A	N/A	N/A	N/A	N/A	N/A	N/A	N/A
62	Combustion Floor Base (10) (Downflow)	N/A	N/A	N/A	N/A	N/A	N/A	N/A	N/A
63	Bottom Filter Box (Upflow)	C4046602	C4046601	C4046601	C4046602	C4046602	C4046602	C4046603	C4046603
64	Side Filter Cabinet (Upflow)	N/A	N/A	N/A	N/A	N/A	N/A	N/A	N/A
65	Downflow Filter Kit	N/A	N/A	N/A	N/A	N/A	N/A	N/A	N/A
66	Nat. to L.P. Conversion Kit (U.S.)	C4026300	C4026300	C4026300	C4026300	C4026300	C4026300	C4026300	C4026300
67	L.P. to Nat. Conversion Kit (U.S.)	C4038200	C4038200	C4038200	C4038200	C4038200	C4038200	C4038200	C4038200
68	California Nox Screen	N/A	N/A	N/A	N/A	N/A	N/A	N/A	N/A
69	High Altitude Kit, Above 6000 Feet	N/A	N/A	N/A	N/A	N/A	N/A	N/A	N/A
70	High Temperature Plastic Vent Support	C4099500	C4099500	C4099500	C4099500	C4099500	C4099500	C4099500	C4099500
71	Inducer Pan Kit	C4124202	N/A	N/A	N/A	N/A	N/A	N/A	N/A
	Nat. to L.P. Conversion Kit (Cdn.)								
	L.P. to Nat. Conversion Kit (Cdn.)								
	High Altitude Kit, Canada, 2000 - 4500 Feet	C4068300	C4068300	C4068300	C4068300	C4068300	C4068300	C4068300	C4068300

MMB Series - Mid-Efficiency Multi-Positional Gas-Fired Furnace (Consolidated)																
Model Number	Input	Output	AFUE	Motor Type Speed	Blower Size	Temp Rise	Motor FLA	Motor Speed	Tons A/C @ .5 W.C.	CFM vs External Static Pressure					
										.1	.2	.3	.4	.5	.6
MMB0401C	40,000	32,500	80.2	1/4 PSC 4 spd	10-4	50-80	4.0	HI	2.0	1000	950	900	850	805	730
								MH	1.5	890	845	800	760	710	640
MMB0401CH	36,000	29,300	80.2					ML	1.0	715	675	635	605	550	-
								LO	-	475	435	390	-	-	-
MMB0402C	40,000	32,500	80.2	1/3 PSC 4 spd	10-6	30-60	6.5	HI	3.0	1500	1450	1380	1340	1265	1180
								MH	2.5	1200	1160	1130	1100	1040	980
MMB0402CH	36,000	29,300	80.2					ML	2.0	920	905	875	850	810	770
								LO	1.5	705	690	670	640	615	560
MMB0601C	60,000	48,800	80.2	1/4 PSC 4 spd	10-4	45-75	4.0	HI	2.0	1040	1000	910	850	755	730
								MH	1.5	915	875	800	735	640	640
MMB0601CH	54,000	43,900	80.2					ML	1.5	740	710	635	560	-	-
								LO	-	475	450	-	-	-	-
MMB0602C	60,000	48,800	80.2	1/3 PSC 4 spd	10-6	45-75	6.7	HI	3.0	1485	1435	1375	1340	1260	1170
								MH	2.5	1175	1160	1125	1070	1035	970
MMB0602CH	54,000	43,900	80.2					ML	2.0	900	880	860	840	800	760
								LO	1.5	690	675	650	625	600	565
MMB0603C	60,000	48,800	80.2	1/2 PSC 4 spd	10-8	35-65	8.0	HI	4.0	1930	1870	1800	1705	1635	1560
								MH	3.5	1510	1505	1490	1440	1410	1355
MMB0603CH	54,000	43,900	80.2					ML	3.0	1220	1230	1225	1220	1215	1175
								LO	2.5	910	930	980	1020	1025	1015
MMB0801C	80,000	65,000	80.2	1/4 PSC 4 spd	10-4	50-80	4.3	HI	2.0	1155	1105	1050	985	920	850
								MH	1.5	925	900	860	830	770	715
MMB0801CH	72,000	58,500	80.2					ML	1.5	740	715	690	660	630	575
								LO	-	490	465	430	-	-	-
MMB0802C	80,000	65,000	80.2	1/3 PSC 4 spd	10-6	40-70	6.5	HI	3.0	1500	1445	1390	1320	1230	1150
								MH	2.5	1200	1170	1135	1095	1035	970
MMB0802CH	72,000	58,500	80.2					ML	2.0	920	900	870	850	810	775
								LO	1.5	705	690	670	635	620	570
MMB0803C	80,000	65,000	80.2	1/2 PSC 4 spd	10-8	50-80	8.0	HI	4.0	1910	1840	1800	1720	1645	1560
								MH	3.5	1505	1495	1470	1445	1395	1345
MMB0803CH	72,000	58,500	80.2					ML	3.0	1170	1200	1205	1200	1200	1150
								LO	2.5	890	920	950	965	990	985
MMB0804C	80,000	65,000	80.2	3/4 PSC 4 spd	Dual 10-4	40-70	9.2	HI	5.0	2305	2235	2140	2040	1930	1800
								MH	4.0	1630	1650	1630	1610	1560	1495
MMB0804CH	72,000	58,500	80.2					ML	3.5	1315	1355	1385	1370	1365	1330
								LO	3.0	1000	1060	1110	1145	1155	1140
MMB1001C	100,000	81,300	80.2	1/3 PSC 4 spd	10-6	55-85	6.4	HI	3.0	1525	1475	1425	1340	1250	1165
								MH	2.5	1240	1220	1175	1130	1060	1000
MMB1001CH	90,000	73,200	80.2					ML	2.0	965	955	935	900	860	800
								LO	1.5	750	735	720	690	650	620

MMB Series - Mid-Efficiency Multi-Positional Gas-Fired Furnace (Consolidated)															
Model Number	Input	Output	AFUE	Motor Type Speed	Blower Size	Temp Rise	Motor FLA	Motor Speed	Tons A/C @ .5 W.C.	CFM vs External Static Pressure					
										.1	.2	.3	.4	.5	.6
MMB1002C	100,000	81,300	80.2	1/2 PSC 4 spd	10-8	50-80	8.0	HI	4.0	1875	1810	1735	1660	1580	1495
								MH	3.5	1530	1500	1470	1415	1380	1310
MMB1002CH	90,000	73,200	80.2					ML	3.0	1200	1235	1230	1225	1205	1150
								LO	2.5	965	975	1005	1005	990	940
MMB1003C	100,000	81,300	80.2	3/4 PSC 4 spd	Dual 10-4	40-70	9.3	HI	5.0	2315	2245	2165	2050	1950	1850
								MH	4.0	1610	1650	1655	1615	1565	1535
MMB1003CH	90,000	73,200	80.2					ML	3.5	1300	1360	1390	1400	1390	1335
								LO	3.0	965	1030	1075	1120	1135	1150
MMB1201C	120,000	97,600	80.2	1/2 PSC 4 spd	10-8	45-75	8.0	HI	4.0	1960	1910	1815	1735	1655	1550
								MH	3.5	1575	1575	1540	1475	1440	1355
MMB1201CH	108,000	87,800	80.2					ML	3.0	1255	1275	1285	1265	1245	1200
								LO	2.5	975	1005	1045	1050	1040	1010
MMB1202C	120,000	97,600	80.2	3/4 PSC 4 spd	Dual 10-4	45-75	8.8	HI	5.0	2175	2100	2060	2035	1965	1850
								MH	4.0	1535	1525	1525	1580	1540	1475
MMB1202CH	108,000	87,800	80.2					ML	3.0	1325	1305	1340	1340	1340	1300
								LO	2.5	995	1035	1070	1110	1110	1125
MMB1401C	140,000	113,800	80.2	3/4 PSC 4 spd	Dual 10-4	45-75	8.8	HI	4.5	2360	2250	2140	2020	1860	1725
								MH	4.0	1765	1765	1735	1675	1585	1490
MMB1401CH	126,000	102,400	80.2					ML	3.5	1325	1375	1400	1400	1375	1300
								LO	2.5	975	1035	1080	1080	1080	1080
MMB1402C	140,000	113,800	80.2	3/4 PSC 4 spd	Dual 10-6	50-80	9.4	HI	5.5	2445	2400	2390	2360	2235	2100
								MH	4.0	1725	1750	1765	1750	1715	1650
MMB1402CH	126,000	102,400	80.2					ML	3.5	1375	1415	1440	1440	1440	1410
								LO	3.0	1110	1150	1190	1210	1200	1190