HMS-2 Series Mid Efficiency Highboy Gas Furnace - Challenger / UltraSave / Turbo 8300

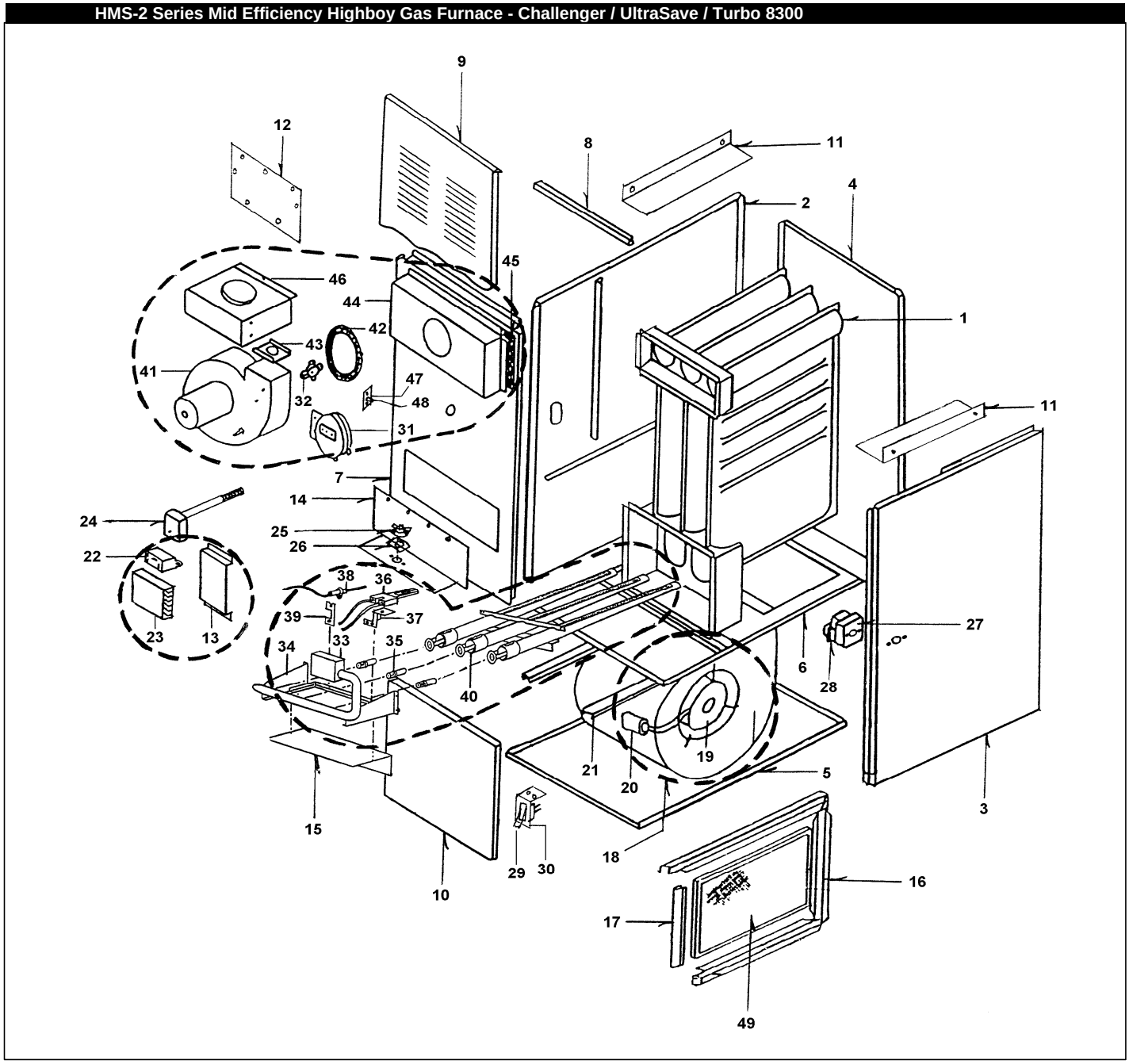

	HMS-2 Series Mid Efficiency Highboy Gas Furnace - Challenger / UltraSave / Turbo 8300						
Ref. No.	Description	HMS-2-45	HMS-2-60	HMS-2-60 "L"	HMS-2-75	HMS-2-75 "L"	HMS-2-90
	NOTE: "T" Suffix indicates Sidewall Vented Unit						
	Sheet Metal Group						
1	Heat Exchanger Assembly	N/A	N/A	N/A	N/A	N/A	N/A
2	Left Side Panel Assembly	N/A	N/A	N/A	N/A	N/A	N/A
3	Right Side Panel Assembly	N/A	N/A	N/A	N/A	N/A	N/A
4	Rear Panel Assembly	N/A	N/A	N/A	N/A	N/A	N/A
5	Base Panel	N/A	N/A	N/A	N/A	N/A	N/A
6	Blower Division Panel Assembly	N/A	N/A	N/A	N/A	N/A	N/A
7	Inner Front Panel Assembly	N/A	N/A	N/A	N/A	N/A	N/A
	Top Panel	N/A	N/A	N/A	N/A	N/A	N/A
	Upper Front Door	N/A	N/A	N/A	N/A	N/A	N/A
8	Door Hanger Channel	N/A	N/A	N/A	N/A	N/A	N/A
9	Upper Front Door	N/A	N/A	N/A	N/A	N/A	N/A
10	Blower Access Door	N/A	N/A	N/A	N/A	N/A	N/A
11	Side Air Baffle	N/A	N/A	N/A	N/A	N/A	N/A
12	Backing Plate	N/A	N/A	N/A	N/A	N/A	N/A
13	Control Panel	N/A	N/A	N/A	N/A	N/A	N/A
14	Flame Shield	N/A	N/A	N/A	N/A	N/A	N/A
16	Filter Frame Assembly, 16 x 20 x 1	N/A	N/A	N/A	N/A	N/A	N/A
16	Filter Frame Assembly, 16 x 25 x 1	N/A	N/A	N/A	N/A	N/A	N/A
17	Filter Frame End Support, 16 x 20	- - -	- - -	- - -	- - -	- - -	- - -
17	Filter Frame End Support, 16 x 25	- - -	- - -	- - -	- - -	- - -	- - -
	Blower Group						
	Blower Assembly, Complete	N/A	N/A	N/A	N/A	N/A	N/A
18	Blower Housing and Wheel, Airdex DC916-416-5	N/A	N/A	- - -	- - -	- - -	- - -
18	Blower Housing and Wheel, Airdex DC916-600-5	- - -	- - -	- - -	N/A	- - -	- - -
18	Blower Housing and Wheel, Delhi D9 DD	- - -	- - -	28754	- - -	28754	- - -
18	Blower Housing and Wheel, Morrison 100-10T DD	- - -	- - -	- - -	- - -	- - -	- - -
	Blower Wheel, 9-4 Direct Drive	N/A	N/A	- - -	- - -	- - -	- - -
	Blower Wheel, Airdex 916-600	- - -	- - -	- - -	26288	- - -	- - -
	Blower Wheel, Airdex 916-916	- - -	- - -	N/A	- - -	N/A	- - -
	Blower Wheel, CM1020-1020	- - -	- - -	- - -	- - -	- - -	- - -
19	Blower Motor, 1/4 hp, 4-Speed, Direct Drive, AOS Cat. No. 752	30059	30059	- - -	- - -	- - -	- - -
19	Blower Motor, 1/3 hp, 4-Speed, Direct Drive, AOS OLE1036	- - -	- - -	550001987	550001987	550001987	550001987
19	Blower Motor, 1/2 hp, 4-Speed, Direct Drive, GE 5KCP39LGY723BS	- - -	- - -	- - -	- - -	- - -	- - -
	Alt: Blower 1/2 HP Motor Kit W/ Mounting Hardware, No Capacitor	- - -	- - -	- - -	- - -	- - -	- - -
	Alt: Blower 1/2 HP Motor Kit W/ Capacitor, No Hardware	- - -	- - -	- - -	- - -	- - -	- - -
	Blower Motor Mounting Band	- - -	- - -	17811	17811	17811	17811

	HMS-2 Series Mid Efficiency Highboy Gas Furnace - Challenger / UltraSave / Turbo 8300						
Ref. No.	**Description**	**HMS-2-45**	**HMS-2-60**	**HMS-2-60 "L"**	**HMS-2-75**	**HMS-2-75 "L"**	**HMS-2-90**
	NOTE: "T" Suffix indicates Sidewall Vented Unit						
	Blower Motor Mounting Arm, (*3 Required*)	- - -	- - -	26250	26250	26250	26250
20	Capacitor, 5 mfd@370 vac, M22P3705M00	27741	27741	27741	27741	27741	27741
20	Capacitor, 10 mfd@370 vac, M22P3710M00	- - -	- - -	- - -	- - -	- - -	- - -
20	Capacitor, 12.5 mfd@370 vac, M22P3712N00	- - -	- - -	27744	27744	27744	27744
	Capacitor Insulator, 44603-0009	27769	27769	27769	27769	27769	27769
	Capacitor Strap, 51045-0013	27760	27760	27760	27760	27760	27760
21	Blower Mounting Rail, (*2 Required*)	N/A	N/A	18189	18189	18189	18189
	Electrical & Controls Group						
22	Relay, Induced Blower, SPST, 24v Coil, 9400-11Q	27739	27739	27739	27739	27739	27739
23	Intermittent Spark Ignition Control, Honeywell S8600H3002B	21452	21452	21452	21452	21452	21452
	Electrode Cable, Honeywell 392286-1, *Raj x Raj*	18893	18893	18893	18893	18893	18893
	Electrode Cable, Honeywell 394801-20, *Raj x 1/4" Quick-Connect*	21455	21455	21455	21455	21455	21455
23	Hot Surface Ignition Control, W-R 50E47-843	20837	20837	20837	20837	20837	20837
24	Fan / Limit Control, 11½" Insertion, 170°F, L4064B or L6064A	- - -	- - -	- - -	12354	- - -	- - -
24	Fan / Limit Control, 11½" Insertion, 190°F, L4064B or L6064A	- - -	- - -	- - -	- - -	- - -	- - -
24	Fan / Limit Control, 11½" Insertion, 200°F, L4064B or L6064A	- - -	- - -	N/A	- - -	N/A	- - -
24	Fan / Limit Control, 11½" Insertion, 250°F, L4064B or L6064A	12615	12615	- - -	- - -	- - -	12615
25	Flame Roll-Out Switch, 350°F, Therm-O-Disc 36TR16-6031	19292	19292	19292	19292	19292	19292
26	Gasket, Flame Roll-Out Switch	N/A	N/A	N/A	N/A	N/A	N/A
27	Junction Box	21318	21318	21318	21318	21318	21318
28	Fan Center, Tyco 1-1611760-0-57-01 V18BC4E231	27740	27740	27740	27740	27740	27740
	Fan Center Replacement Relay, SPDT, Tyco 9400-04Q1999	27767	27767	27767	27767	27767	27767
29	Door Switch, A22B TLB-B	19172	19172	19172	19172	19172	19172
30	Bracket, Door Switch	18932	18932	18932	18932	18932	18932
31	Pressure Switch, + 0.20" w.c., FS6116-659	20649	20649	20649	20649	20649	20649
31	Pressure Switch, + 0.25" w.c., FS6116-764, *see notes*	20829	20829	20829	20829	20829	20829
31	Pressure Switch, + 0.28" w.c., FS6116-636	- - -	- - -	- - -	- - -	- - -	- - -
31	Pressure Switch, + 0.35" w.c., FS6116-498	17990	17990	17990	17990	17990	17990
31	Pressure Switch, - 0.55" w.c., 9300-v, N/O, *see notes*	28308	28308	28308	28308	28308	28308
32	Vent Limit Switch, 200°F, Therm-O-Disc 60T24L200, 205952, *see notes*	N/A	N/A	N/A	- - -	- - -	- - -
32	Vent Limit Switch, 250°F, Therm-O-Disc 60T25L250, 330733, *see notes*	- - -	- - -	- - -	11060	11060	11060
	Fan Relay, SPDT, 24V Coil, 9400-04Q1999	27767	27767	27767	27767	27767	27767
	Transformer, 120 / 24 v, 40 VA, BE161640REK0028	550001533	550001533	550001533	550001533	550001533	550001533
	Junction Box Cover	3011160A	3011160A	3011160A	3011160A	3011160A	3011160A
	Burner Group						
	Inshot Burners, Intermittent Spark, Nat. Gas Only						

	HMS-2 Series Mid Efficiency Highboy Gas Furnace - Challenger / UltraSave / Turbo 8300						
Ref. No.	**Description**	**HMS-2-45**	**HMS-2-60**	**HMS-2-60 "L"**	**HMS-2-75**	**HMS-2-75 "L"**	**HMS-2-90**
	NOTE: "T" Suffix indicates Sidewall Vented Unit						
33	Gas Valve, Honeywell VR8204A2175/B	14662052	14662052	- - -	14662052	- - -	14662052
34	Manifold Assembly	N/A	N/A	- - -	N/A	- - -	N/A
35	Burner Orifice, NG, No. 38 DMS	- - -	3051100B (2)	- - -	- - -	- - -	3051100B (3)
35	Burner Orifice, NG, No. 40 DMS	- - -	- - -	- - -	- - -	- - -	- - -
35	Burner Orifice, NG, No. 41 DMS	- - -	- - -	- - -	10357 (3)	- - -	- - -
35	Burner Orifice, NG, No. 43 DMS	3051094B (2)	- - -	- - -	- - -	- - -	- - -
	Pilot Burner Assembly, Honeywell Q345A1024B	1380004	1380004	- - -	1380004	- - -	1380004
	Pilot Orifice, NG, BCR-18, Honeywell H390686-4	21407	21407	- - -	21407	- - -	21407
	Pilot Bracket	15179	15179	- - -	15179	- - -	15179
	Pilot Tubing, 23", 0.25" O.D. x 0.032 Aluminium	1140146	1140146	- - -	1140146	- - -	1140146
	Air Shutter	N/A (4)	N/A (4)	- - -	N/A (6)	- - -	N/A (6)
	Air Shutter Spring	2160078 (2)	2160078 (2)	- - -	2160078 (3)	- - -	2160078 (3)
	Inshot Burner, Left	- - -	- - -	- - -	N/A	- - -	N/A
	Inshot Burner, Center	N/A	N/A	- - -	N/A	- - -	N/A
	Inshot Burner, Right	- - -	- - -	- - -	N/A	- - -	N/A
14	Flame Shield	N/A	N/A	- - -	N/A	- - -	N/A
15	Burner Bottom Shield	N/A	N/A	- - -	N/A	- - -	N/A
	BSI Ribbon Burners, Intermittent Spark, NG or LP Gas						
33	Gas Valve, NG, Honeywell VR8204A2175/B	14662052	14662052	14662052	14662052	14662052	14662052
33	Gas Valve, LP, Honeywell VR8204A2043B	18603	- - -	18603	18603	18603	- - -
34	Manifold Assembly	N/A	N/A	N/A	N/A	N/A	N/A
35	Burner Orifice, NG, No. 38 DMS	- - -	3051100B (2)	- - -	- - -	- - -	3051100B (3)
35	Burner Orifice, NG, No. 40 DMS	- - -	- - -	- - -	- - -	- - -	- - -
35	Burner Orifice, NG, No. 41 DMS	- - -	- - -	- - -	10357 (3)	10357 (3)	- - -
35	Burner Orifice, NG, No. 43 DMS	3051094B (2)	- - -	3051094B (3)	- - -	- - -	- - -
35	Burner Orifice, LP, No. 52 DMS	- - -	- - -	- - -	- - -	- - -	- - -
35	Burner Orifice, LP, No. 53 DMS	- - -	- - -	- - -	3051111B (3)	3051111B (3)	- - -
35	Burner Orifice, LP, No. 55 DMS	- - -	- - -	- - -	- - -	- - -	- - -
	Pilot Burner Assembly, Honeywell Q345A1024B	1380004	1380004	1380004	1380004	1380004	1380004
	Pilot Orifice, NG, BCR-18, Honeywell H390686-4	21407	21407	21407	21407	21407	21407
	Pilot Orifice, LP, BBR-12, Honeywell 390686-25	2012100A	- - -	2012100A	2012100A	2012100A	2012100A
	Pilot Bracket	10028	10028	10028	10028	10028	10028
	Pilot Tubing, 23", 0.25" O.D. x 0.032 Aluminium	1140146	1140146	1140146	1140146	1140146	1140146
40	BSI Ribbon Burner Assembly	16725	16725	10741	10741	10741	10741
14	Flame Shield	N/A	N/A	N/A	N/A	N/A	N/A
15	Burner Bottom Shield	N/A	N/A	N/A	N/A	N/A	N/A
	BSI Ribbon Burners, HSI, NG or LP Gas, mfg after 4/16/1991						

	HMS-2 Series Mid Efficiency Highboy Gas Furnace - Challenger / UltraSave / Turbo 8300						
Ref. No.	**Description**	**HMS-2-45**	**HMS-2-60**	**HMS-2-60 "L"**	**HMS-2-75**	**HMS-2-75 "L"**	**HMS-2-90**
	NOTE: "T" Suffix indicates Sidewall Vented Unit						
33	Gas Valve, Natural Gas, Honeywell VR8205A2008B	26180	26180	26180	26180	26180	26180
33	Gas Valve, L.P. Gas, Honeywell VR8205A2016B	26181	- - -	- - -	26181	26181	- - -
34	Manifold Assembly	N/A	N/A	N/A	N/A	N/A	N/A
35	Burner Orifice, NG, No. 38 DMS	- - -	3051100B (2)	- - -	- - -	- - -	3051100B (3)
35	Burner Orifice, NG, No. 40 DMS	- - -	- - -	- - -	- - -	- - -	- - -
35	Burner Orifice, NG, No. 41 DMS	- - -	- - -	- - -	10357 (3)	10357 (3)	- - -
35	Burner Orifice, NG, No. 43 DMS	3051094B (2)	- - -	3051094B (3)	- - -	- - -	- - -
35	Burner Orifice, LP, No. 52 DMS	- - -	- - -	- - -	- - -	- - -	- - -
35	Burner Orifice, LP, No. 53 DMS	- - -	- - -	- - -	3051111B (3)	3051111B (3)	- - -
35	Burner Orifice, LP, No. 55 DMS	N/A (2)	- - -	- - -	- - -	- - -	- - -
36	Hot Surface Ignitor, Norton 201W, 45 Second	20834	20834	20834	20834	20834	20834
37	Bracket, Hot Surface Ignitor	N/A	N/A	N/A	N/A	N/A	N/A
38	Flame Sensor, Straight, Honeywell 272789	26878	26878	26878	26878	26878	26878
39	Bracket, Flame Sensor	21757	21757	21757	21757	21757	21757
38	Flame Sensor, White-Rodgers 3107-60-401	N/A	N/A	N/A	N/A	N/A	N/A
40	BSI Ribbon Burner Assembly	16725	16725	10741	10741	10741	10741
14	Flame Shield	N/A	N/A	N/A	N/A	N/A	N/A
15	Burner Bottom Shield	N/A	N/A	N/A	N/A	N/A	N/A
	Venting Group						
41	Induced Blower Assembly Replacement Kit	26986	26986	26986	26986	26986	26986
42	Induced Blower Gasket	21873	21873	21873	21873	21873	21873
43	Flue Orifice, 7/8", *see notes*	N/A	- - -	- - -	- - -	- - -	- - -
43	Flue Orifice, 1-1/16", *see notes*	- - -	N/A	N/A	- - -	- - -	- - -
43	Flue Orifice, 1-1/8", *see notes*	- - -	N/A	N/A	- - -	- - -	- - -
43	Flue Orifice, 1-3/16", *see notes*	- - -	- - -	- - -	N/A	N/A	- - -
43	Flue Orifice, 1-5/16", *see notes*	- - -	- - -	- - -	N/A	N/A	- - -
43	Flue Orifice, 1-3/8", *see notes*	- - -	- - -	- - -	- - -	- - -	N/A
43	Flue Orifice, 1-9/16", *see notes*	- - -	- - -	- - -	- - -	- - -	- - -
43	Flue Orifice, 1-1/2", *see notes*	- - -	- - -	- - -	- - -	- - -	- - -
43	Flue Orifice, 1-5/8", *see notes*	- - -	- - -	- - -	- - -	- - -	- - -
43	Flue Orifice, 1-11/16", *see notes*	- - -	- - -	- - -	- - -	- - -	- - -
43	Flue Orifice, 1-13/16", *see notes*	- - -	- - -	- - -	- - -	- - -	- - -
44	Collection Box	N/A	N/A	N/A	N/A	N/A	N/A
45	Collection Box Gasket	N/A	N/A	N/A	N/A	N/A	N/A
46	Vent Box Assembly	N/A	N/A	N/A	N/A	N/A	N/A
32	Vent Limit Switch, 200°F, Therm-O-Disc 60T24L200, 205952, *see notes*	N/A	N/A	N/A	- - -	- - -	- - -
32	Vent Limit Switch, 250°F, Therm-O-Disc 60T25L250, 330733, *see notes*	- - -	- - -	- - -	11060	11060	11060
47	Offset Bracket - *Sidewall vented models only*	N/A	N/A	N/A	N/A	N/A	N/A
48	Hose Barb, - *Sidewall vented models only*	N/A	N/A	N/A	N/A	N/A	N/A

	HMS-2 Series Mid Efficiency Highboy Gas Furnace - Challenger / UltraSave / Turbo 8300						
Ref. No.	**Description**	**HMS-2-45**	**HMS-2-60**	**HMS-2-60 "L"**	**HMS-2-75**	**HMS-2-75 "L"**	**HMS-2-90**
	NOTE: "T" Suffix indicates Sidewall Vented Unit						
	Gasket, O-Ring, 0.112 x 0.103, *used with above hose barb*	N/A	N/A	N/A	N/A	N/A	N/A
	Nut, Brass, Hex, No. 10-32, *used with above hose barb*	2131020A	2131020A	2131020A	2131020A	2131020A	2131020A
31	Pressure Switch, + 0.20" w.c., FS6116-659	20649	20649	20649	20649	20649	20649
31	Pressure Switch, + 0.25" w.c., FS6116-764, *see notes*	20829	20829	20829	20829	20829	20829
31	Pressure Switch, + 0.28" w.c., FS6116-636	- - -	- - -	- - -	- - -	- - -	- - -
31	Pressure Switch, + 0.35" w.c., FS6116-498	17990	17990	17990	17990	17990	17990
31	Pressure Switch, - 0.55" w.c., 9300-v, N/O, *see notes*	28308	28308	28308	28308	28308	28308
	Silicone Tubing, 3¾", (*to IBR*), SR200 1/8" I.D., Clear	11344	11344	11344	11344	11344	11344
	Silicone Tubing, 10", (*to Vent Box*), SR200 1/8" I.D., Clear	11344	11344	11344	11344	11344	11344
	Miscellaneous Group						
49	Air Filter, Permanent, 16 x 20 x 1	- - -	- - -	2180026	2180026	2180026	2180026
49	Air Filter, Permanent, 16 x 25 x 1	- - -	- - -	- - -	- - -	- - -	- - -
	Horizontal Vent Termination for "T" Models.	N/A	N/A	N/A	N/A	N/A	N/A
	P/N 26986 Induced Blower Replacement Kit Contents:						
	16-inches, Tube, Silicone, SR200, 1/8" I.D., Clear						
	4 Screws, No. 10 x 3/4, Hex-head / slot with shoulder.						
	2 Combustion Blower Gasket						
	1 Wire, 24", 16 Gauge AWG, 1 St 1/4" QC with Heat Shrink, 1 bare end						
	1 Induced Blower, JA1M209N						
	1 Back Plate with 1.5" I.D. Orifice						
	1 Pressure Switch, - 0.55" w.c., 9300-V N/O						
	1 Hose Barb, Brass, 48P122-7, 0.38" Insertion						
	1 Speed-Nut, No. 2102						
	1 Installation Instructions for Kit No. 26986						

	HMS-2 Series Mid Efficiency Highboy Gas Furnace - Challenger /						
Ref. No.	**Description**	**HMS-2-100/90**	**HMS-2-105**	**HMS-2-120**	**HMS-2-130/120**	**HMS-2-130B**	**HMS-2-150**
	NOTE: "T" Suffix indicates Sidewall Vented Unit						
	Sheet Metal Group						
1	Heat Exchanger Assembly	N/A	N/A	N/A	N/A	N/A	N/A
2	Left Side Panel Assembly	N/A	N/A	N/A	N/A	N/A	N/A
3	Right Side Panel Assembly	N/A	N/A	N/A	N/A	N/A	N/A
4	Rear Panel Assembly	N/A	N/A	N/A	N/A	N/A	N/A
5	Base Panel	N/A	N/A	N/A	N/A	N/A	N/A
6	Blower Division Panel Assembly	N/A	N/A	N/A	N/A	N/A	N/A
7	Inner Front Panel Assembly	N/A	N/A	N/A	N/A	N/A	N/A
	Top Panel	N/A	N/A	N/A	N/A	N/A	N/A
	Upper Front Door	N/A	N/A	N/A	N/A	N/A	N/A
8	Door Hanger Channel	N/A	N/A	N/A	N/A	N/A	N/A
9	Upper Front Door	N/A	N/A	N/A	N/A	N/A	N/A
10	Blower Access Door	N/A	N/A	N/A	N/A	N/A	N/A
11	Side Air Baffle	N/A	- - -	- - -	- - -	- - -	- - -
12	Backing Plate	N/A	N/A	N/A	N/A	N/A	N/A
13	Control Panel	N/A	N/A	N/A	N/A	N/A	N/A
14	Flame Shield	N/A	N/A	N/A	N/A	N/A	N/A
16	Filter Frame Assembly, 16 x 20 x 1	N/A	N/A	N/A	N/A	- - -	- - -
16	Filter Frame Assembly, 16 x 25 x 1	N/A	N/A	N/A	N/A	18020	18020
17	Filter Frame End Support, 16 x 20	- - -	- - -	- - -	- - -	- - -	- - -
17	Filter Frame End Support, 16 x 25	- - -	- - -	- - -	- - -	5592B2	5592B2
	Blower Group						
	Blower Assembly, Complete	N/A	N/A	N/A	N/A	N/A	N/A
18	Blower Housing and Wheel, Airdex DC916-416-5	- - -	- - -	- - -	- - -	- - -	- - -
18	Blower Housing and Wheel, Airdex DC916-600-5	N/A	- - -	- - -	- - -	- - -	- - -
18	Blower Housing and Wheel, Delhi D9 DD	- - -	28754	28754	28754	- - -	- - -
18	Blower Housing and Wheel, Morrison 100-10T DD	- - -	- - -	- - -	- - -	30626	30626
	Blower Wheel, 9-4 Direct Drive	- - -	- - -	- - -	- - -	- - -	- - -
	Blower Wheel, Airdex 916-600	26288	- - -	- - -	- - -	- - -	- - -
	Blower Wheel, Airdex 916-916	- - -	N/A	N/A	N/A	- - -	- - -
	Blower Wheel, CM1020-1020	- - -	- - -	- - -	- - -	26430	26430
19	Blower Motor, 1/4 hp, 4-Speed, Direct Drive, AOS Cat. No. 752	- - -	- - -	- - -	- - -	- - -	- - -
19	Blower Motor, 1/3 hp, 4-Speed, Direct Drive, AOS OLE1036	550001987	550001987	550001987	550001987	- - -	- - -
19	Blower Motor, 1/2 hp, 4-Speed, Direct Drive, GE 5KCP39LGY723BS	- - -	- - -	- - -	- - -	102000131	102000131
	Alt: Blower 1/2 HP Motor Kit W/ Mounting Hardware, No Capacitor	- - -	- - -	- - -	- - -	27836	27836
	Alt: Blower 1/2 HP Motor Kit W/ Capacitor, No Hardware	- - -	- - -	- - -	- - -	550001530	550001530
	Blower Motor Mounting Band	17811	17811	17811	17811	17811	17811

	HMS-2 Series Mid Efficiency Highboy Gas Furnace - Challenger /						
Ref. No.	**Description**	**HMS-2-100/90**	**HMS-2-105**	**HMS-2-120**	**HMS-2-130/120**	**HMS-2-130B**	**HMS-2-150**
	NOTE: "T" Suffix indicates Sidewall Vented Unit						
	Blower Motor Mounting Arm, (*3 Required*)	26250	26250	26250	26250	26251	26251
20	Capacitor, 5 mfd@370 vac, M22P3705M00	27741	27741	27741	27741	- - -	- - -
20	Capacitor, 10 mfd@370 vac, M22P3710M00	- - -	- - -	- - -	- - -	27743	27743
20	Capacitor, 12.5 mfd@370 vac, M22P3712N00	27744	27744	27744	27744	- - -	- - -
	Capacitor Insulator, 44603-0009	27769	27769	27769	27769	27769	27769
	Capacitor Strap, 51045-0013	27760	27760	27760	27760	27760	27760
21	Blower Mounting Rail, (*2 Required*)	18189	18189	18189	18189	18189	18189
	Electrical & Controls Group						
22	Relay, Induced Blower, SPST, 24v Coil, 9400-11Q	27739	27739	27739	27739	27739	27739
23	Intermittent Spark Ignition Control, Honeywell S8600H3002B	21452	21452	21452	21452	21452	21452
	Electrode Cable, Honeywell 392286-1, *Raj x Raj*	18893	18893	18893	18893	18893	18893
	Electrode Cable, Honeywell 394801-20, *Raj x 1/4" Quick-Connect*	21455	21455	21455	21455	21455	21455
23	Hot Surface Ignition Control, W-R 50E47-843	20837	20837	20837	20837	20837	20837
24	Fan / Limit Control, 11½" Insertion, 170°F, L4064B or L6064A	12354	- - -	- - -	- - -	12354	12354
24	Fan / Limit Control, 11½" Insertion, 190°F, L4064B or L6064A	- - -	N/A	- - -	- - -	- - -	- - -
24	Fan / Limit Control, 11½" Insertion, 200°F, L4064B or L6064A	- - -	12356	12356	12356	- - -	- - -
24	Fan / Limit Control, 11½" Insertion, 250°F, L4064B or L6064A	- - -	- - -	- - -	- - -	- - -	- - -
25	Flame Roll-Out Switch, 350°F, Therm-O-Disc 36TR16-6031	19292	19292	19292	19292	19292	19292
26	Gasket, Flame Roll-Out Switch	N/A	N/A	N/A	N/A	N/A	N/A
27	Junction Box	21318	21318	21318	21318	21318	21318
28	Fan Center, Tyco 1-1611760-0-57-01 V18BC4E231	27740	27740	27740	27740	27740	27740
	Fan Center Replacement Relay, SPDT, Tyco 9400-04Q1999	27767	27767	27767	27767	27767	27767
29	Door Switch, A22B TLB-B	19172	19172	19172	19172	19172	19172
30	Bracket, Door Switch	18932	18932	18932	18932	18932	18932
31	Pressure Switch, + 0.20" w.c., FS6116-659	20649	20649	20649	20649	20649	20649
31	Pressure Switch, + 0.25" w.c., FS6116-764, *see notes*	20829	20829	20829	20829	- - -	- - -
31	Pressure Switch, + 0.28" w.c., FS6116-636	- - -	- - -	- - -	- - -	N/A	N/A
31	Pressure Switch, + 0.35" w.c., FS6116-498	17990	17990	17990	17990	- - -	- - -
31	Pressure Switch, - 0.55" w.c., 9300-v, N/O, *see notes*	28308	28308	28308	28308	- - -	- - -
32	Vent Limit Switch, 200°F, Therm-O-Disc 60T24L200, 205952, *see notes*	- - -	- - -	- - -	- - -	- - -	- - -
32	Vent Limit Switch, 250°F, Therm-O-Disc 60T25L250, 330733, *see notes*	11060	11060	11060	11060	11060	11060
	Fan Relay, SPDT, 24V Coil, 9400-04Q1999	27767	27767	27767	27767	27767	27767
	Transformer, 120 / 24 v, 40 VA, BE161640REK0028	550001533	550001533	550001533	550001533	550001533	550001533
	Junction Box Cover	3011160A	3011160A	3011160A	3011160A	3011160A	3011160A
	Burner Group						
	Inshot Burners, Intermittent Spark, Nat. Gas Only						

	HMS-2 Series Mid Efficiency Highboy Gas Furnace - Challenger /						
Ref. No.	**Description**	**HMS-2-100/90**	**HMS-2-105**	**HMS-2-120**	**HMS-2-130/120**	**HMS-2-130B**	**HMS-2-150**
	NOTE: "T" Suffix indicates Sidewall Vented Unit						
33	Gas Valve, Honeywell VR8204A2175/B	14662052	14662052	14662052	14662052	- - -	14662052
34	Manifold Assembly	N/A	N/A	N/A	N/A	- - -	N/A
35	Burner Orifice, NG, No. 38 DMS	3051100B (3)	- - -	3051100B (4)	3051100B (4)	- - -	3051100B (5)
35	Burner Orifice, NG, No. 40 DMS	- - -	3051097B (4)	- - -	- - -	- - -	- - -
35	Burner Orifice, NG, No. 41 DMS	- - -	- - -	- - -	- - -	- - -	- - -
35	Burner Orifice, NG, No. 43 DMS	- - -	- - -	- - -	- - -	- - -	- - -
	Pilot Burner Assembly, Honeywell Q345A1024B	1380004	1380004	1380004	1380004	- - -	1380004
	Pilot Orifice, NG, BCR-18, Honeywell H390686-4	21407	21407	21407	21407	- - -	21407
	Pilot Bracket	15179	15179	15179	15179	- - -	15179
	Pilot Tubing, 23", 0.25" O.D. x 0.032 Aluminium	1140146	1140146	1140146	1140146	- - -	1140146
	Air Shutter	N/A (6)	N/A (8)	N/A (8)	N/A (8)	- - -	N/A (10)
	Air Shutter Spring	2160078 (3)	2160078 (4)	2160078 (4)	2160078 (4)	- - -	2160078 (5)
	Inshot Burner, Left	N/A	N/A	N/A	N/A	- - -	N/A
	Inshot Burner, Center	N/A	N/A	N/A	N/A	- - -	N/A
	Inshot Burner, Right	N/A	N/A	N/A	N/A	- - -	N/A
14	Flame Shield	N/A	N/A	N/A	N/A	- - -	N/A
15	Burner Bottom Shield	N/A	N/A	N/A	N/A	- - -	N/A
	BSI Ribbon Burners, Intermittent Spark, NG or LP Gas						
33	Gas Valve, NG, Honeywell VR8204A2175/B	14662052	14662052	14662052	14662052	- - -	14662052
33	Gas Valve, LP, Honeywell VR8204A2043B	- - -	18603	18603	- - -	18603	18603
34	Manifold Assembly	N/A	N/A	N/A	N/A	N/A	N/A
35	Burner Orifice, NG, No. 38 DMS	3051100B (3)	- - -	3051100B (4)	3051100B (4)	- - -	3051100B (5)
35	Burner Orifice, NG, No. 40 DMS	- - -	3051097B (4)	- - -	- - -	- - -	- - -
35	Burner Orifice, NG, No. 41 DMS	- - -	- - -	- - -	- - -	- - -	- - -
35	Burner Orifice, NG, No. 43 DMS	- - -	- - -	- - -	- - -	- - -	- - -
35	Burner Orifice, LP, No. 52 DMS	- - -	- - -	3051110B (4)	- - -	- - -	- - -
35	Burner Orifice, LP, No. 53 DMS	- - -	3051111B (4)	- - -	- - -	3051111B (5)	3051111B (5)
35	Burner Orifice, LP, No. 55 DMS	- - -	- - -	- - -	- - -	- - -	- - -
	Pilot Burner Assembly, Honeywell Q345A1024B	1380004	1380004	1380004	1380004	1380004	1380004
	Pilot Orifice, NG, BCR-18, Honeywell H390686-4	21407	21407	21407	21407	21407	21407
	Pilot Orifice, LP, BBR-12, Honeywell 390686-25	2012100A	2012100A	2012100A	2012100A	2012100A	2012100A
	Pilot Bracket	10028	10028	10028	10028	10028	10028
	Pilot Tubing, 23", 0.25" O.D. x 0.032 Aluminium	1140146	1140146	1140146	1140146	1140146	1140146
40	BSI Ribbon Burner Assembly	10741	16726	16726	16726	16727	16727
14	Flame Shield	N/A	N/A	N/A	N/A	N/A	N/A
15	Burner Bottom Shield	N/A	N/A	N/A	N/A	N/A	N/A
	BSI Ribbon Burners, HSI, NG or LP Gas, mfg after 4/16/1991						

	HMS-2 Series Mid Efficiency Highboy Gas Furnace - Challenger /						
Ref. No.	**Description**	**HMS-2-100/90**	**HMS-2-105**	**HMS-2-120**	**HMS-2-130/120**	**HMS-2-130B**	**HMS-2-150**
	NOTE: "T" Suffix indicates Sidewall Vented Unit						
33	Gas Valve, Natural Gas, Honeywell VR8205A2008B	26180	26180	26180	26180	- - -	26180
33	Gas Valve, L.P. Gas, Honeywell VR8205A2016B	- - -	26181	- - -	- - -	26181	- - -
34	Manifold Assembly	N/A	N/A	N/A	N/A	N/A	N/A
35	Burner Orifice, NG, No. 38 DMS	3051100B (3)	- - -	3051100B (4)	3051100B (4)	- - -	3051100B (5)
35	Burner Orifice, NG, No. 40 DMS	- - -	3051097B (4)	- - -	- - -	- - -	- - -
35	Burner Orifice, NG, No. 41 DMS	- - -	- - -	- - -	- - -	- - -	- - -
35	Burner Orifice, NG, No. 43 DMS	- - -	- - -	- - -	- - -	- - -	- - -
35	Burner Orifice, LP, No. 52 DMS	- - -	- - -	- - -	- - -	- - -	- - -
35	Burner Orifice, LP, No. 53 DMS	- - -	3051111B (4)	- - -	- - -	3051111B (5)	- - -
35	Burner Orifice, LP, No. 55 DMS	- - -	- - -	- - -	- - -	- - -	- - -
36	Hot Surface Ignitor, Norton 201W, 45 Second	20834	20834	20834	20834	20834	20834
37	Bracket, Hot Surface Ignitor	N/A	N/A	N/A	N/A	N/A	N/A
38	Flame Sensor, Straight, Honeywell 272789	26878	26878	26878	26878	26878	26878
39	Bracket, Flame Sensor	21757	21757	21757	21757	21757	21757
38	Flame Sensor, White-Rodgers 3107-60-401	N/A	N/A	N/A	N/A	N/A	N/A
40	BSI Ribbon Burner Assembly	10741	16726	16726	16726	16727	16727
14	Flame Shield	N/A	N/A	N/A	N/A	N/A	N/A
15	Burner Bottom Shield	N/A	N/A	N/A	N/A	N/A	N/A
	Venting Group						
41	Induced Blower Assembly Replacement Kit	26986	26986	26986	26171	26171	26171
42	Induced Blower Gasket	21873	21873	21873	21873	21873	21873
43	Flue Orifice, 7/8", *see notes*	- - -	- - -	- - -	- - -	- - -	- - -
43	Flue Orifice, 1-1/16", *see notes*	- - -	- - -	- - -	- - -	- - -	- - -
43	Flue Orifice, 1-1/8", *see notes*	- - -	- - -	- - -	- - -	- - -	- - -
43	Flue Orifice, 1-3/16", *see notes*	- - -	- - -	- - -	- - -	- - -	- - -
43	Flue Orifice, 1-5/16", *see notes*	- - -	- - -	- - -	- - -	- - -	- - -
43	Flue Orifice, 1-3/8", *see notes*	N/A	N/A	- - -	- - -	- - -	- - -
43	Flue Orifice, 1-9/16", *see notes*	- - -	- - -	N/A	N/A	- - -	- - -
43	Flue Orifice, 1-1/2", *see notes*	- - -	N/A	- - -	- - -	- - -	- - -
43	Flue Orifice, 1-5/8", *see notes*	- - -	- - -	- - -	- - -	N/A	- - -
43	Flue Orifice, 1-11/16", *see notes*	- - -	- - -	- - -	- - -	- - -	N/A
43	Flue Orifice, 1-13/16", *see notes*	- - -	- - -	- - -	- - -	N/A	N/A
44	Collection Box	N/A	N/A	N/A	N/A	N/A	N/A
45	Collection Box Gasket	N/A	N/A	N/A	N/A	N/A	N/A
46	Vent Box Assembly	N/A	N/A	N/A	N/A	N/A	N/A
32	Vent Limit Switch, 200°F, Therm-O-Disc 60T24L200, 205952, *see notes*	- - -	- - -	- - -	- - -	- - -	- - -
32	Vent Limit Switch, 250°F, Therm-O-Disc 60T25L250, 330733, *see notes*	11060	11060	11060	11060	11060	11060
47	Offset Bracket - *Sidewall vented models only*	N/A	N/A	N/A	N/A	N/A	N/A
48	Hose Barb, - *Sidewall vented models only*	N/A	N/A	N/A	N/A	N/A	N/A

	HMS-2 Series Mid Efficiency Highboy Gas Furnace - Challenger /						
Ref. No.	**Description**	**HMS-2-100/90**	**HMS-2-105**	**HMS-2-120**	**HMS-2-130/120**	**HMS-2-130B**	**HMS-2-150**
	NOTE: "T" Suffix indicates Sidewall Vented Unit						
	Gasket, O-Ring, 0.112 x 0.103, *used with above hose barb*	N/A	N/A	N/A	N/A	N/A	N/A
	Nut, Brass, Hex, No. 10-32, *used with above hose barb*	2131020A	2131020A	2131020A	2131020A	2131020A	2131020A
31	Pressure Switch, + 0.20" w.c., FS6116-659	20649	20649	20649	20649	20649	20649
31	Pressure Switch, + 0.25" w.c., FS6116-764, *see notes*	20829	20829	20829	20829	- - -	- - -
31	Pressure Switch, + 0.28" w.c., FS6116-636	- - -	- - -	- - -	- - -	N/A	N/A
31	Pressure Switch, + 0.35" w.c., FS6116-498	17990	17990	17990	17990	- - -	- - -
31	Pressure Switch, - 0.55" w.c., 9300-v, N/O, *see notes*	28308	28308	28308	28308	- - -	- - -
	Silicone Tubing, 3¾", (*to IBR*), SR200 1/8" I.D., Clear	11344	11344	11344	11344	11344	11344
	Silicone Tubing, 10", (*to Vent Box*), SR200 1/8" I.D., Clear	11344	11344	11344	11344	11344	11344
	Miscellaneous Group						
49	Air Filter, Permanent, 16 x 20 x 1	2180026	2180026	2180026	2180026	- - -	- - -
49	Air Filter, Permanent, 16 x 25 x 1	- - -	- - -	- - -	- - -	2180023	2180023
	Horizontal Vent Termination for "T" Models.	N/A	N/A	N/A	N/A	N/A	N/A
	P/N 26986 Induced Blower Replacement Kit Contents:						
	16-inches, Tube, Silicone, SR200, 1/8" I.D., Clear						
	4 Screws, No. 10 x 3/4, Hex-head / slot with shoulder.						
	2 Combustion Blower Gasket						
	1 Wire, 24", 16 Gauge AWG, 1 St 1/4" QC with Heat Shrink, 1 bare end						
	1 Induced Blower, JA1M209N						
	1 Back Plate with 1.5" I.D. Orifice						
	1 Pressure Switch, - 0.55" w.c., 9300-V N/O						
	1 Hose Barb, Brass, 48P122-7, 0.38" Insertion						
	1 Speed-Nut, No. 2102						
	1 Installation Instructions for Kit No. 26986						

HMS-2 Series Mid Efficiency Highboy Gas Furnace - Challenger / UltraSave / Turbo 8300

Specifications

Natural Gas and Propane:

Model	Ratings BTU/HR		Main Blower	External Static Pressure				CFM @ 85 Rise	Cooling Capacity			A.F.U.E. %
				.20 W.C.		.50 W.C.			E.S.P. .50 W.C.			
	Input	Output		Speed	Motor	Speed	Motor		Tons	H.P.	CFM Range	
HMSII 45	45,000	37,400	D9-4	LO	1/4	HI	1/4	400	1-1/2	1/4	400 - 600	81.8
HMSII 60	60,000	48,600	D9-4	MED	1/4	HI	1/4	530	1-1/2	1/4	400 - 600	81.5
HMSII 75	75,000	61,500	D9-6	LO	1/4	HI	1/4	650	2 - 2-1/2	1/4	600 - 1000	81.8
HMSII 100/90	90,000 100,000	70,200 78,000	D9-6	MED	1/4	HI	1/4	870	2 - 2-1/2	1/4	600 - 1000	N/L
HMSII 90 US	90,000	73,800	D9-9	LO	1/3	HI	1/3	870	2 - 3	1/3	800 - 1200	75.4
HMSII 105	105,000	87,150	D9-9	LO	1/3	HI	1/3	870	2 - 3	1/3	800 - 1200	81.6
HMSII 130/120	120,000 130,000	94,000 101,400	D9-9	MED	1/3	HI	1/3	1120	2 - 3	1/3	800 - 1200	N/L
HMSII 120 US	120,000	97,800	D9-9	MED	1/3	HI	1/3	1120	2 - 3	1/3	800 - 1200	80.5
HMSII 150	150,000	118,500	D10-10T	MED	1/2	HI	1/2	1320	3 - 4	1/2	1000 - 1600	80.0
HMSII 130B (LP only)	130,000	105,300	D10-10T	LO	1/2	HI	1/2	1120	3 - 4	1/2	1000 - 1600	N/L

Dimensions

Model	Cabinet			Return Plenum (SW x SD)	Warm Air Plenum (RH x RD)	Flue Dia.	Filters (Permanent)	Shipping WT. LBS.
	Width A	Depth B	HT. C					
HMSII 45, 60	13-1/2	28	51	12 x 18-1/4	14 x 18	4	16 x 20 x 1	155
HMSII 75, 100/90	13-1/2	28	51	12 x 18-1/4	14 x 18	4	16 x 20 x 1	165
HMSII 90 US	17-1/2	28	51	16 x 18-1/4	14 x 18	4	16 x 20 x 1	175
HMSII 105	17-1/2	28	51	16 x 18-1/4	14 x 18	4	16 x 20 x 1	195
HMSII 130/120, 120 US	17-1/2	28	51	16 x 18-1/4	14 x 18	4	16 x 20 x 1	195
HMSII 150, 130B	21-1/2	28	51	20 x 18-1/4	14 x 22	4	16 x 25 x 1	225