EMP Series - Mid-Efficiency Multi-Positional Gas-Fired Furnace (Consolidated)

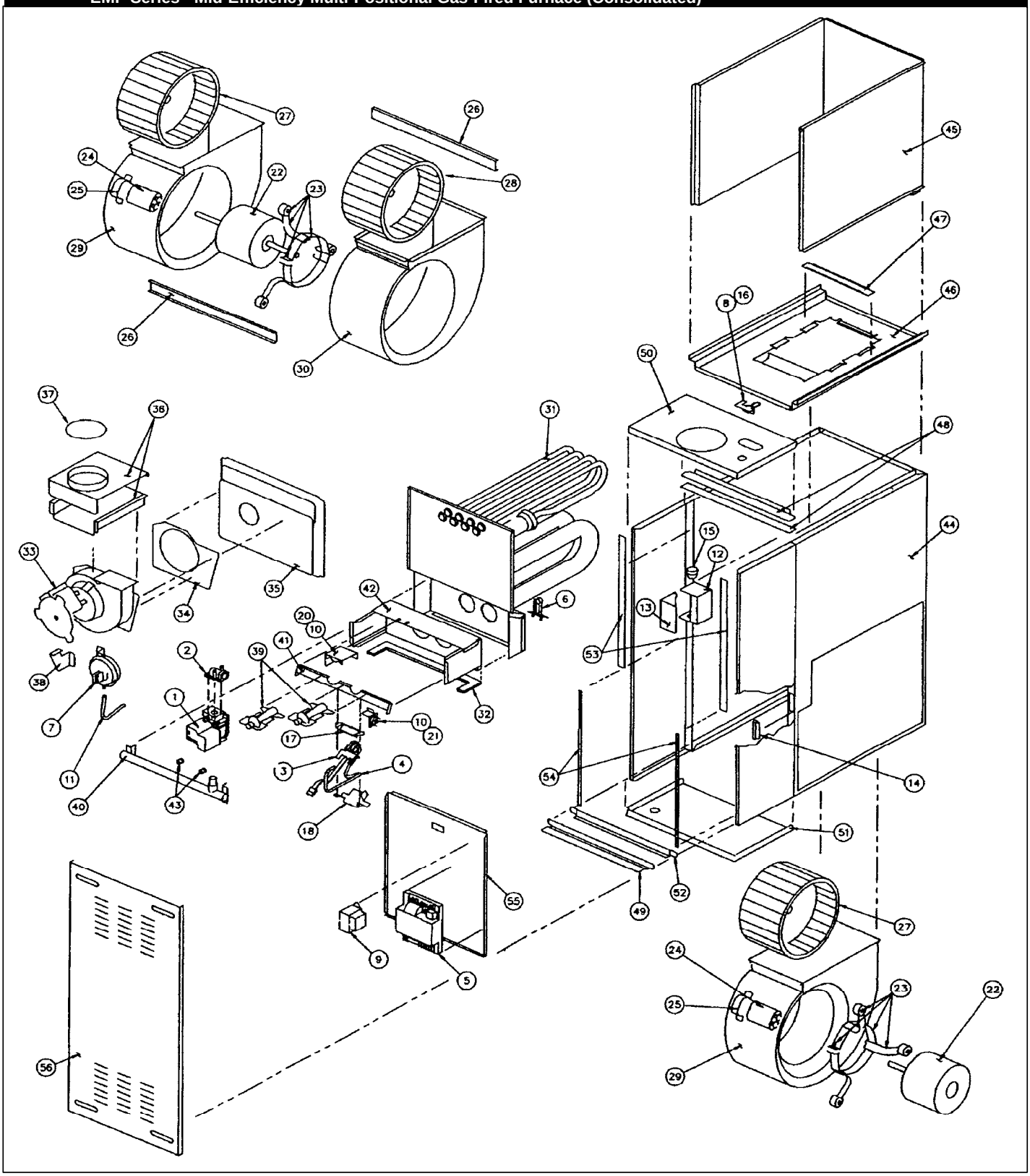

	EMP Series - Mid-Efficiency Multi-Positional Gas-Fired Furnace (Consolidated)								
		40000	40000	60000	60000	60000	80000	80000	80000
Ref #	**Description**	**EMP040N08**	**EMP040N12**	**EMP060N08**	**EMP060N12**	**EMP060N16**	**EMP080N08**	**EMP080N12**	**EMP080N16**
		1/4 hp	1/3 hp	1/4 hp	1/3 hp	1/2 hp	1/4 hp	1/3 hp	1/2 hp
	Consolidated Reference No.	040-2	040-3	060-2	060-3	060-4	080-2	080-3	080-4
	Controls Group								
1	Gas Control, Natural Gas, Honeywell SV9500M	C4211700	C4211700	C4211700	C4211700	C4211700	C4211700	C4211700	C4211700
2	Inlet Gas Connector	C4085300	C4085300	C4085300	C4085300	C4085300	C4085300	C4085300	C4085300
3	Pilot/Ignitor, Honeywell Q3450D	C4103200	C4103200	C4103200	C4103200	C4103200	C4103200	C4103200	C4103200
4	Pilot Tubing	N/A	N/A	N/A	N/A	N/A	N/A	N/A	N/A
5	Fan Timer (406650)	C4116000	C4116000	C4116000	C4116000	C4116000	C4116000	C4116000	C4116000
5	Fan Timer, w/ cont. low speed fan option, (425850)	C4258600	C4258600	C4258600	C4258600	C4258600	C4258600	C4258600	C4258600
6	Primary Limit Switch	C4035000	C4035001	C4035000	C4035001	C4035001	C4035001	C4035000	C4035001
7	Pressure Switch	C4026900	C4026900	C4026900	C4026900	C4026900	C4026900	C4026900	C4026900
8	Power Disconnect	N/A	N/A	N/A	N/A	N/A	N/A	N/A	N/A
9	Transformer, 40VA	C4100800	C4100800	C4100800	C4100800	C4100800	C4100800	C4100800	C4100800
10	Burner Limit Switch	C4035300	C4035300	C4035300	C4035300	C4035300	C4035300	C4035300	C4035300
	Hardware								
11	Pressure Switch Tubing	N/A	N/A	N/A	N/A	N/A	N/A	N/A	N/A
12	Junction Box	N/A	N/A	N/A	N/A	N/A	N/A	N/A	N/A
13	Junction Box Cover	N/A	N/A	N/A	N/A	N/A	N/A	N/A	N/A
14	Hem Bushing	N/A	N/A	N/A	N/A	N/A	N/A	N/A	N/A
15	Strain Relief	N/A	N/A	N/A	N/A	N/A	N/A	N/A	N/A
16	Disconnect Bracket	N/A	N/A	N/A	N/A	N/A	N/A	N/A	N/A
17	Pilot Mounting Bracket	C408990	C408990	C408990	C408990	C408990	C408990	C408990	C408990
18	Pilot Shield	N/A	N/A	N/A	N/A	N/A	N/A	N/A	N/A
19	Wire Harness Kit (*not shown*)	C4101500	C4101500	C4101500	C4101500	C4101500	C4101500	C4101500	C4101500
20	Upper Burner Limit Switch Bracket	C401180	C401180	C401180	C401180	C401180	C401180	C401180	C401180
21	Lower Burner Limit Switch Bracket	N/A	N/A	C402250	C402250	C402250	C402250	C402250	C402250
	Blower Group								
	Blower Assembly	N/A	N/A	N/A	N/A	C4102802	N/A	N/A	C4102802
22	Blower Motor	N/A	C4101101	N/A	C4101101	C4101102	N/A	C4101101	C4101102
23	Motor Mounting Kit	C4038701	C4038701	C4038701	C4038701	C4038700	C4038701	C4038701	C4038700
24	Capacitor	C4036000	C4036000	C4036000	C4036000	C4036002	C4036000	C4036000	C4036002
25	Capacitor Strap	N/A	N/A	N/A	N/A	N/A	N/A	N/A	N/A
26	Blower Housing Support	N/A	N/A	N/A	N/A	N/A	N/A	N/A	N/A
27	Blower Wheel, Direct Drive, (Convex)	C4039500	C4039502	C4039500	C4039502	C4039504	C4039500	C4039502	C4039504
28	Blower Wheel, Direct Drive, (Concave)	N/A	N/A	N/A	N/A	N/A	N/A	N/A	N/A
29	Blower Housing	N/A	C4102401	N/A	C4102401	C4102402	N/A	C4102401	C4102402

	EMP Series - Mid-Efficiency Multi-Positional Gas-Fired Furnace (Consolidated)								
		40000	40000	60000	60000	60000	80000	80000	80000
Ref #	**Description**	**EMP040N08**	**EMP040N12**	**EMP060N08**	**EMP060N12**	**EMP060N16**	**EMP080N08**	**EMP080N12**	**EMP080N16**
		1/4 hp	1/3 hp	1/4 hp	1/3 hp	1/2 hp	1/4 hp	1/3 hp	1/2 hp
	Consolidated Reference No.	040-2	040-3	060-2	060-3	060-4	080-2	080-3	080-4
30	Blower Housing	N/A	N/A	N/A	N/A	N/A	N/A	N/A	N/A
	Heat Exchanger Group								
31	Heat Exchanger Assembly	N/A	N/A	N/A	N/A	N/A	N/A	N/A	N/A
32	Bottom Bulkhead Gasket	N/A	N/A	N/A	N/A	N/A	N/A	N/A	N/A
	Draft Inducer Group								
33	Draft Inducer Motor Assembly	C4026600	C4026600	C4026600	C4026600	C4026600	C4026600	C4026600	C4026600
34	Draft Inducer Motor Gasket	N/A	N/A	N/A	N/A	N/A	N/A	N/A	N/A
35	Inducer Pan Assembly	C401340	C401340	C401341	C401341	N/A	C401342	C401342	C401344
36	Flue Box	N/A	N/A	C4042301	C4042301	C4042301	C4042301	C4042301	C4042301
37	Vent Gasket	N/A	N/A	N/A	N/A	N/A	N/A	N/A	N/A
38	Flue Box Support	C401320	C401320	C401320	C401320	C401320	C401320	C401320	C401320
	Burner Group								
39	Main Burner	C4036500	C4036500	C4036500	C4036500	C4036500	C4036500	C4036500	C4036500
40	Manifold	N/A	N/A	C400111	C400111	C400111	C400112	C400112	C400112
41	Main Burner Mount	N/A	N/A	N/A	N/A	N/A	N/A	N/A	N/A
42	Venturi Plate	N/A	N/A	C400682	C400682	C400682	N/A	N/A	N/A
43	Main Burner Orifices	N/A	N/A	N/A	N/A	N/A	N/A	N/A	N/A
43	Main Burner Orifices, L.P. Gas	nsu	nsu	nsu	nsu	nsu	nsu	nsu	nsu
43	Main Burner Orifices, Cdn. High Altitude, Nat. Gas	nla	nla	nla	nla	nla	nla	nla	nla
43	Main Burner Orifices, Cdn. High Altitude, L.P. Gas	C403022	C403022	C403022	C403022	C403022	C403022	C403022	C403022
	Venturi & Manifold	N/A	N/A	N/A	N/A	N/A	N/A	N/A	N/A
	Casing Group								
44	Casing	N/A	N/A	N/A	N/A	N/A	N/A	N/A	N/A
45	Radiation Shield Assembly	N/A	N/A	N/A	N/A	N/A	N/A	N/A	N/A
46	Blower Deck	N/A	N/A	N/A	N/A	N/A	N/A	N/A	N/A
47	Air Baffle	N/A	N/A	N/A	N/A	N/A	N/A	N/A	N/A
48	Insulated Duct Flange	N/A	N/A	N/A	N/A	N/A	N/A	N/A	N/A
49	Door Channel	N/A	N/A	N/A	N/A	N/A	N/A	N/A	N/A
50	Top Plate Assembly	N/A	N/A	N/A	N/A	N/A	N/A	N/A	N/A
51	Base Panel	N/A	N/A	N/A	N/A	N/A	N/A	N/A	N/A
52	Base Support	N/A	N/A	N/A	N/A	N/A	N/A	N/A	N/A
53	Hem Gaskets	N/A	N/A	N/A	N/A	N/A	N/A	N/A	N/A

	EMP Series - Mid-Efficiency Multi-Positional Gas-Fired Furnace (Consolidated)								
		40000	40000	60000	60000	60000	80000	80000	80000
Ref #	**Description**	**EMP040N08**	**EMP040N12**	**EMP060N08**	**EMP060N12**	**EMP060N16**	**EMP080N08**	**EMP080N12**	**EMP080N16**
		1/4 hp	1/3 hp	1/4 hp	1/3 hp	1/2 hp	1/4 hp	1/3 hp	1/2 hp
	Consolidated Reference No.	040-2	040-3	060-2	060-3	060-4	080-2	080-3	080-4
54	Door Gaskets	N/A	N/A	N/A	N/A	N/A	N/A	N/A	N/A
	Accessory Group (not shown)								
55	Blower Door (U.S.)	N/A	N/A	N/A	N/A	N/A	N/A	N/A	N/A
55	Blower Door (Cdn.)	N/A	N/A	N/A	N/A	N/A	N/A	N/A	N/A
56	Outer Door (U.S.)	nsu	nsu	nsu	nsu	nsu	nsu	nsu	nsu
56	Outer Door (Cdn.)	N/A	N/A	N/A	N/A	N/A	N/A	N/A	N/A
57	Bottom Closures (1) Upflow	N/A	N/A	N/A	N/A	N/A	N/A	N/A	N/A
57	Bottom Closures (10) Upflow	C4045900	C4045900	C4045900	C4045900	C4045901	C4045900	C4045900	C4045901
58	Filters (10) 14 x 25 Upflow	N/A	N/A	N/A	N/A	N/A	N/A	N/A	N/A
59	Filters (10) 16 x 25 Upflow	N/A	N/A	N/A	N/A	N/A	N/A	N/A	N/A
60	Filters (10) 20 x 25 Upflow	N/A	N/A	N/A	N/A	N/A	N/A	N/A	N/A
61	Filters (10) 16 x 20 (All Downflow)	N/A	N/A	N/A	N/A	N/A	N/A	N/A	N/A
62	Combustion Floor Base (10) (Downflow)	N/A	N/A	N/A	N/A	N/A	N/A	N/A	N/A
63	Bottom Filter Box (Upflow)	C4046600	C4046600	C4046600	C4046600	C4046601	C4046600	C4046600	C4046601
64	Side Filter Cabinet (Upflow)	N/A	N/A	N/A	N/A	N/A	N/A	N/A	N/A
65	Downflow Filter Kit	N/A	N/A	N/A	N/A	N/A	N/A	N/A	N/A
66	Nat. to L.P. Conversion Kit, below 6000 feet	C4026300	C4026300	C4026300	C4026300	C4026300	C4026300	C4026300	C4026300
67	Nat. to L.P. Conversion Kit, above 6000 feet	C4146500	C4146500	C4146500	C4146500	C4146500	C4146500	C4146500	C4146500
68	L.P. to Nat. Conversion Kit, below 6000 feet	C4038200	C4038200	C4038200	C4038200	C4038200	C4038200	C4038200	C4038200
69	L.P. to Nat. Conversion Kit, above 6000 feet	C4146600	C4146600	C4146600	C4146600	C4146600	C4146600	C4146600	C4146600
70	California Nox Screen	N/A	N/A	N/A	N/A	N/A	N/A	N/A	N/A
71	Twinning Kit, (*For upflow position only*)	C4254500	C4254500	C4254500	C4254500	C4254500	C4254500	C4254500	C4254500
72	Touch-up Paint Kit - Gray	N/A	N/A	N/A	N/A	N/A	N/A	N/A	N/A
	High Altitude Kit, Canada, 2000 - 4500 Feet	C4068300	C4068300	C4068300	C4068300	C4068300	C4068300	C4068300	C4068300

	EMP Series - Mid-Efficiency Multi-Positional Gas-I								
		80000	100000	100000	100000	120000	120000	140000	140000
Ref #	**Description**	**EMP080N20**	**EMP100N12**	**EMP100N16**	**EMP100N20**	**EMP120N16**	**EMP120N20**	**EMP140N16**	**EMP140N20**
		3/4 hp	1/3 hp	1/2 hp	3/4 hp	1/2 hp	3/4 hp	3/4 hp	3/4 hp
	Consolidated Reference No.	080-5	100-3	100-4	100-5	120-4	120-5	140-4	140-5
	Controls Group								
1	Gas Control, Natural Gas, Honeywell SV9500M	C4211700	C4211700	C4211700	C4211700	C4211700	C4211700	C4211700	C4211700
2	Inlet Gas Connector	C4085300	C4085300	C4085300	C4085300	C4085300	C4085300	C4085300	C4085300
3	Pilot/Ignitor, Honeywell Q3450D	C4103200	C4103200	C4103200	C4103200	C4103200	C4103200	C4103200	C4103200
4	Pilot Tubing	N/A	N/A	N/A	N/A	N/A	N/A	N/A	N/A
5	Fan Timer (406650)	C4116000	C4116000	C4116000	C4116000	C4116000	C4116000	C4116000	C4116000
5	Fan Timer, w/ cont. low speed fan option, (425850)	C4258600	C4258600	C4258600	C4258600	C4258600	C4258600	C4258600	C4258600
6	Primary Limit Switch	C4035000	C4035001	C4035000	C4035000	C4035000	C4035000	C4035000	C4035001
7	Pressure Switch	C4026900	C4026900	C4026900	C4026900	C4026900	C4026900	C4026900	C4026900
8	Power Disconnect	N/A	N/A	N/A	N/A	N/A	N/A	N/A	N/A
9	Transformer, 40VA	C4100800	C4100800	C4100800	C4100800	C4100800	C4100800	C4100800	C4100800
10	Burner Limit Switch	C4035300	C4035300	C4035300	C4035300	C4035300	C4035300	C4035300	C4035300
	Hardware								
11	Pressure Switch Tubing	N/A	N/A	N/A	N/A	N/A	N/A	N/A	N/A
12	Junction Box	N/A	N/A	N/A	N/A	N/A	N/A	N/A	N/A
13	Junction Box Cover	N/A	N/A	N/A	N/A	N/A	N/A	N/A	N/A
14	Hem Bushing	N/A	N/A	N/A	N/A	N/A	N/A	N/A	N/A
15	Strain Relief	N/A	N/A	N/A	N/A	N/A	N/A	N/A	N/A
16	Disconnect Bracket	N/A	N/A	N/A	N/A	N/A	N/A	N/A	N/A
17	Pilot Mounting Bracket	C408990	C408990	C408990	C408990	C408990	C408990	C408990	C408990
18	Pilot Shield	N/A	N/A	N/A	N/A	N/A	N/A	N/A	N/A
19	Wire Harness Kit (*not shown*)	C4101500	C4101500	C4101500	C4101500	C4101500	C4101500	C4101500	C4101500
20	Upper Burner Limit Switch Bracket	C401180	C401180	C401180	C401180	C401180	C401180	C401180	C401180
21	Lower Burner Limit Switch Bracket	C402250	C402250	C402250	C402250	C402250	C402250	C402250	C402250
	Blower Group								
	Blower Assembly	C4102900	N/A	C4102802	C4102900	C4102802	C4102900	C4102900	C4102901
22	Blower Motor	N/A	C4101101	C4101102	N/A	C4101102	N/A	N/A	N/A
23	Motor Mounting Kit	C4038701	C4038701	C4038700	C4038701	C4038700	C4038701	C4038701	C4038701
24	Capacitor	C4036001	C4036000	C4036002	C4036001	C4036002	C4036001	C4036001	C4036001
25	Capacitor Strap	N/A	N/A	N/A	N/A	N/A	N/A	N/A	N/A
26	Blower Housing Support	N/A	N/A	N/A	N/A	N/A	N/A	N/A	N/A
27	Blower Wheel, Direct Drive, (Convex)	C4039500	C4039502	C4039504	C4039500	C4039504	C4039500	C4039500	C4039502
28	Blower Wheel, Direct Drive, (Concave)	C4039501	N/A	N/A	C4039501	N/A	C4039501	C4039501	N/A
29	Blower Housing	N/A	C4102401	C4102402	N/A	C4102402	N/A	N/A	N/A

	EMP Series - Mid-Efficiency Multi-Positional Gas-I								
		80000	100000	100000	100000	120000	120000	140000	140000
Ref #	**Description**	**EMP080N20**	**EMP100N12**	**EMP100N16**	**EMP100N20**	**EMP120N16**	**EMP120N20**	**EMP140N16**	**EMP140N20**
		3/4 hp	1/3 hp	1/2 hp	3/4 hp	1/2 hp	3/4 hp	3/4 hp	3/4 hp
	Consolidated Reference No.	080-5	100-3	100-4	100-5	120-4	120-5	140-4	140-5
30	Blower Housing	C4102404	N/A	N/A	C4102404	N/A	C4102404	C4102404	N/A
	Heat Exchanger Group								
31	Heat Exchanger Assembly	N/A	N/A	N/A	N/A	N/A	N/A	N/A	N/A
32	Bottom Bulkhead Gasket	N/A	N/A	N/A	N/A	N/A	N/A	N/A	N/A
	Draft Inducer Group								
33	Draft Inducer Motor Assembly	C4026600	C4118300	C4118300	C4118300	C4118300	C4118300	C4118300	C4118300
34	Draft Inducer Motor Gasket	N/A	N/A	N/A	N/A	N/A	N/A	N/A	N/A
35	Inducer Pan Assembly	N/A	N/A	N/A	N/A	N/A	N/A	N/A	N/A
36	Flue Box	C4042301	C4042301	C4042301	C4042301	C4042302	C4042302	C4042302	C4042302
37	Vent Gasket	N/A	N/A	N/A	N/A	N/A	N/A	N/A	N/A
38	Flue Box Support	C401320	C401320	C401320	C401320	C401320	C401320	C401320	C401320
	Burner Group								
39	Main Burner	C4036500	C4036500	C4036500	C4036500	C4036500	C4036500	C4036500	C4036500
40	Manifold	C400112	C400113	C400113	C400113	N/A	N/A	N/A	N/A
41	Main Burner Mount	N/A	N/A	N/A	N/A	N/A	N/A	N/A	N/A
42	Venturi Plate	N/A	N/A	N/A	N/A	N/A	N/A	C400685	C400685
43	Main Burner Orifices	N/A	N/A	N/A	N/A	N/A	N/A	N/A	N/A
43	Main Burner Orifices, L.P. Gas	nsu	nsu	nsu	nsu	nsu	nsu	nsu	nsu
43	Main Burner Orifices, Cdn. High Altitude, Nat. Gas	nla	nla	nla	nla	nla	nla	nla	nla
43	Main Burner Orifices, Cdn. High Altitude, L.P. Gas	C403022	C403022	C403022	C403022	C403022	C403022	C403022	C403022
	Venturi & Manifold	N/A	N/A	N/A	N/A	N/A	N/A	N/A	N/A
	Casing Group								
44	Casing	N/A	N/A	N/A	N/A	N/A	N/A	N/A	N/A
45	Radiation Shield Assembly	N/A	N/A	N/A	N/A	N/A	N/A	N/A	N/A
46	Blower Deck	N/A	N/A	N/A	N/A	N/A	N/A	N/A	N/A
47	Air Baffle	N/A	N/A	N/A	N/A	N/A	N/A	N/A	N/A
48	Insulated Duct Flange	C401672	N/A	N/A	C401672	C401672	C401672	N/A	N/A
49	Door Channel	N/A	N/A	N/A	N/A	N/A	N/A	N/A	N/A
50	Top Plate Assembly	N/A	N/A	N/A	N/A	N/A	N/A	N/A	N/A
51	Base Panel	N/A	N/A	N/A	N/A	N/A	N/A	N/A	N/A
52	Base Support	N/A	N/A	N/A	N/A	N/A	N/A	N/A	N/A
53	Hem Gaskets	N/A	N/A	N/A	N/A	N/A	N/A	N/A	N/A

	EMP Series - Mid-Efficiency Multi-Positional Gas-I								
		80000	100000	100000	100000	120000	120000	140000	140000
Ref #	**Description**	**EMP080N20**	**EMP100N12**	**EMP100N16**	**EMP100N20**	**EMP120N16**	**EMP120N20**	**EMP140N16**	**EMP140N20**
		3/4 hp	1/3 hp	1/2 hp	3/4 hp	1/2 hp	3/4 hp	3/4 hp	3/4 hp
	Consolidated Reference No.	080-5	100-3	100-4	100-5	120-4	120-5	140-4	140-5
54	Door Gaskets	N/A	N/A	N/A	N/A	N/A	N/A	N/A	N/A
	Accessory Group (not shown)								
55	Blower Door (U.S.)	N/A	N/A	N/A	N/A	N/A	N/A	N/A	N/A
55	Blower Door (Cdn.)	N/A	N/A	N/A	N/A	N/A	N/A	N/A	N/A
56	Outer Door (U.S.)	nsu	nsu	nsu	nsu	nsu	nsu	nsu	nsu
56	Outer Door (Cdn.)	N/A	N/A	N/A	N/A	N/A	N/A	N/A	N/A
57	Bottom Closures (1) Upflow	N/A	N/A	N/A	N/A	N/A	N/A	N/A	N/A
57	Bottom Closures (10) Upflow	C4045902	C4045901	C4045901	C4045902	C4045902	C4045902	C4045903	C4045903
58	Filters (10) 14 x 25 Upflow	N/A	N/A	N/A	N/A	N/A	N/A	N/A	N/A
59	Filters (10) 16 x 25 Upflow	N/A	N/A	N/A	N/A	N/A	N/A	N/A	N/A
60	Filters (10) 20 x 25 Upflow	N/A	N/A	N/A	N/A	N/A	N/A	N/A	N/A
61	Filters (10) 16 x 20 (All Downflow)	N/A	N/A	N/A	N/A	N/A	N/A	N/A	N/A
62	Combustion Floor Base (10) (Downflow)	N/A	N/A	N/A	N/A	N/A	N/A	N/A	N/A
63	Bottom Filter Box (Upflow)	C4046602	C4046601	C4046601	C4046602	C4046602	C4046602	C4046603	C4046603
64	Side Filter Cabinet (Upflow)	N/A	N/A	N/A	N/A	N/A	N/A	N/A	N/A
65	Downflow Filter Kit	N/A	N/A	N/A	N/A	N/A	N/A	N/A	N/A
66	Nat. to L.P. Conversion Kit, below 6000 feet	C4026300	C4026300	C4026300	C4026300	C4026300	C4026300	C4026300	C4026300
67	Nat. to L.P. Conversion Kit, above 6000 feet	C4146500	C4146500	C4146500	C4146500	C4146500	C4146500	C4146500	C4146500
68	L.P. to Nat. Conversion Kit, below 6000 feet	C4038200	C4038200	C4038200	C4038200	C4038200	C4038200	C4038200	C4038200
69	L.P. to Nat. Conversion Kit, above 6000 feet	C4146600	C4146600	C4146600	C4146600	C4146600	C4146600	C4146600	C4146600
70	California Nox Screen	N/A	N/A	N/A	N/A	N/A	N/A	N/A	N/A
71	Twinning Kit, (*For upflow position only*)	C4254500	C4254500	C4254500	C4254500	C4254500	C4254500	C4254500	C4254500
72	Touch-up Paint Kit - Gray	N/A	N/A	N/A	N/A	N/A	N/A	N/A	N/A
	High Altitude Kit, Canada, 2000 - 4500 Feet	C4068300	C4068300	C4068300	C4068300	C4068300	C4068300	C4068300	C4068300

EMP Series - Mid-Efficiency Multi-Positional Gas-Fired Furnace (Consolidated)

Specifications

Heating Output/Efficiency			Blower Performance Application Data											
Heating Input	Heating Output	AFUE Rating (%)	Motor Size	Blower Size	Temp. Rise (°F)	Motor Amps	Motor Speed	Cooling @ 0.5	Airflow vs. Static Pressure					
									.1	.2	.3	.4	.5	.6
40,000	32,500	80.2	1/4	10-4	50-80	4.0	HI	2.0	1000	950	900	850	805	730
							MH	1.5	890	845	800	760	710	640
							ML	1.0	715	675	635	605	550	-
							LO	-	475	435	390	-	-	-
40,000	32,500	80.2	1/3	10-6	30-60	6.5	HI	3.0	1500	1450	1380	1340	1265	1180
							MH	2.5	1200	1160	1130	1100	1040	980
							ML	2.0	920	905	875	850	810	770
							LO	1.5	705	690	670	640	615	560
60,000	48,800	80.2	1/4	10-4	45-75	4.0	HI	2.0	1040	1000	935	910	850	755
							MH	1.5	915	875	835	800	735	640
							ML	1.5	740	710	670	635	560	-
							LO	-	475	450	410	-	-	-
60,000	48,800	80.2	1/3	10-6	45-75	6.7	HI	3.0	1485	1435	1375	1340	1260	1170
							MH	2.5	1175	1160	1125	1070	1035	970
							ML	2.0	900	880	860	840	800	760
							LO	1.5	690	675	650	625	600	565
60,000	48,800	80.2	1/2	10-8	35-65	8.0	HI	4.0	1930	1870	1800	1705	1635	1560
							MH	3.5	1510	1505	1490	1440	1410	1355
							ML	3.0	1220	1230	1225	1220	1215	1175
							LO	2.5	910	930	980	1020	1025	1015
80,000	65,000	80.2	1/4	10-4	50-80	4.3	HI	2.0	1155	1105	1050	985	920	850
							MH	1.5	925	900	860	830	770	715
							ML	1.5	740	715	690	660	630	575
							LO	-	490	465	430	-	-	-
80,000	65,000	80.2	1/3	10-6	40-70	6.5	HI	3.0	1500	1445	1390	1320	1230	1150
							MH	2.5	1200	1170	1135	1095	1035	970
							ML	2.0	920	900	870	850	810	775
							LO	1.5	705	690	670	635	620	570
80,000	65,000	80.2	1/2	10-8	50-80	8.0	HI	4.0	1910	1840	1800	1720	1645	1560
							MH	3.5	1505	1495	1470	1445	1395	1345
							ML	3.0	1170	1200	1205	1200	1200	1150
							LO	2.5	890	920	950	965	990	985

EMP Series - Mid-Efficiency Multi-Positional Gas-Fired Furnace (Consolidated)

Specifications

Heating Output/Efficiency			Blower Performance Application Data											
Heating Input	Heating Output	AFUE Rating (%)	Motor Size	Blower Size	Temp. Rise (°F)	Motor Amps	Motor Speed	Cooling @ 0.5	Airflow vs. Static Pressure					
									.1	.2	.3	.4	.5	.6
80,000	65,000	80.2	3/4	Dual 10-4	40-70	9.2	HI	5.0	2305	2235	2140	2040	1930	1800
							MH	4.0	1630	1650	1630	1610	1560	1495
							ML	3.5	1315	1355	1385	1370	1365	1330
							LO	3.0	1000	1060	1110	1145	1155	1140
100,000	81,300	80.2	1/3	10-6	55-85	6.4	HI	3.0	1525	1475	1425	1340	1250	1165
							MH	2.5	1240	1220	1175	1130	1060	1000
							ML	2.0	965	955	935	900	860	800
							LO	1.5	750	735	720	690	650	620
100,000	81,300	80.2	1/2	10-8	50-80	8.0	HI	4.0	1875	1810	1735	1660	1580	1495
							MH	3.5	1530	1500	1470	1415	1380	1310
							ML	3.0	1200	1235	1230	1225	1205	1150
							LO	2.5	965	975	1005	1005	990	940
100,000	81,300	80.2	3/4	Dual 10-4	40-70	9.3	HI	5.0	2315	2245	2165	2050	1950	1850
							MH	4.0	1610	1650	1655	1615	1565	1535
							ML	3.5	1300	1360	1390	1400	1390	1335
							LO	3.0	965	1030	1075	1120	1135	1150
120,000	97,600	80.2	1/2	10-8	45-75	8.0	HI	4.0	1960	1910	1815	1735	1655	1550
							MH	3.5	1575	1575	1540	1475	1440	1355
							ML	3.0	1255	1275	1285	1265	1245	1200
							LO	2.5	975	1005	1045	1050	1040	1010
120,000	97,600	80.2	3/4	Dual 10-4	45-75	8.8	HI	5.0	2175	2100	2060	2035	1965	1850
							MH	4.0	1535	1525	1525	1580	1540	1475
							ML	3.0	1325	1305	1340	1340	1340	1300
							LO	2.5	995	1035	1070	1110	1110	1125
140,000	113,800	80.2	3/4	Dual 10-4	45-75	8.8	HI	4.5	2360	2250	2140	2020	1860	1725
							MH	4.0	1765	1765	1735	1675	1585	1490
							ML	3.5	1325	1375	1400	1400	1375	1300
							LO	2.5	975	1035	1080	1080	1080	1080
140,000	113,800	80.2	3/4	Dual 10-6	50-80	9.4	HI	5.5	2445	2400	2390	2360	2235	2100
							MH	4.0	1725	1750	1765	1750	1715	1650
							ML	3.5	1375	1415	1440	1440	1440	1410
							LO	3.0	1110	1150	1190	1210	1200	1190