WHS(M) Series Mid Efficiency Downflow Gas Furnace

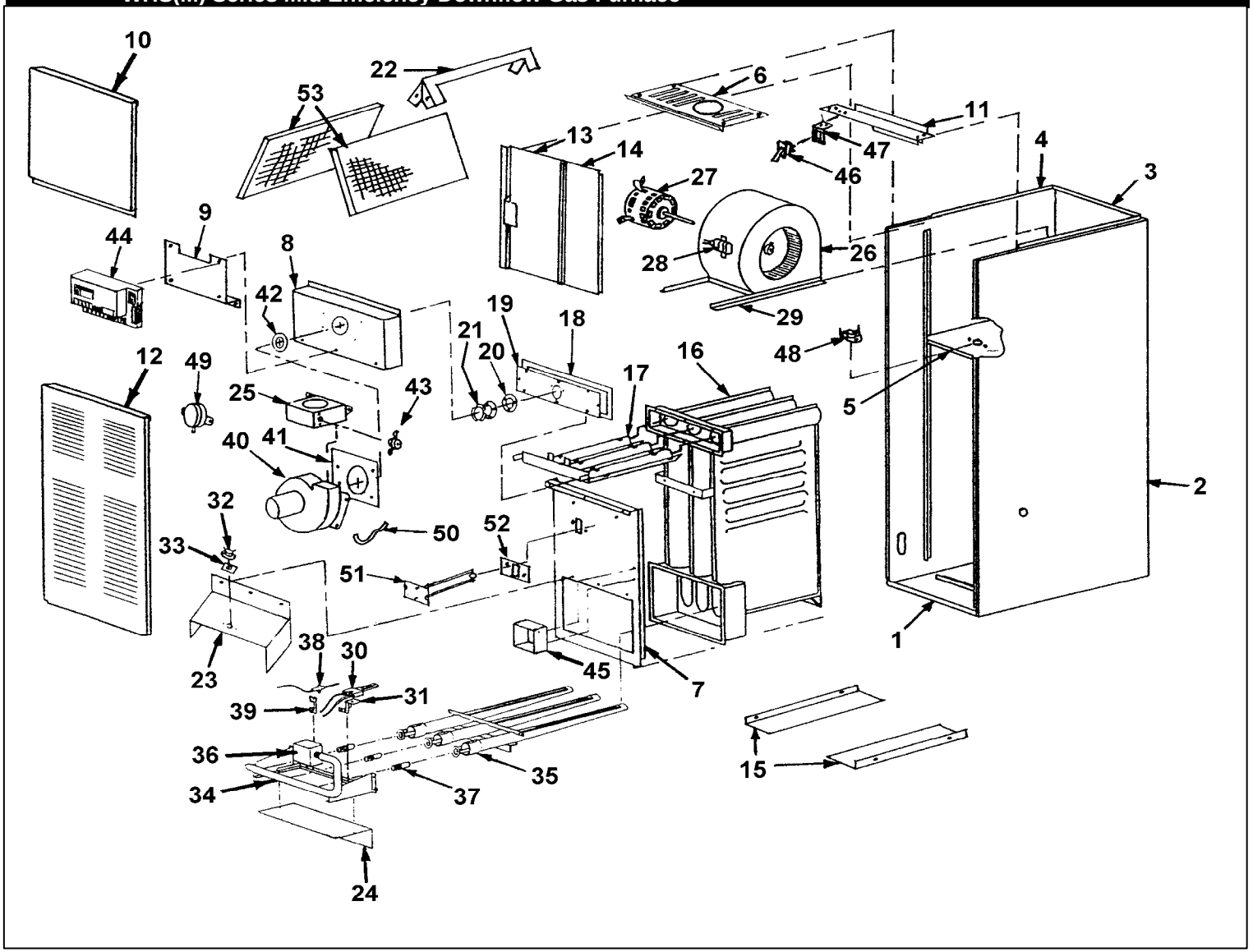

	WHS(M) Series Mid Efficiency Downflow Gas Furnace						
Ref. No.	**Description**	**WHS-45M**	**WHS-60M**	**WHS-75M**	**WHS-90M**	**WHS-105M**	**WHS-120M**
	Sheet Metal Group						
1	Base Panel	N/A	N/A	N/A	N/A	N/A	N/A
2	Right Side Panel	N/A	N/A	N/A	N/A	N/A	N/A
3	Rear Panel	N/A	N/A	N/A	N/A	N/A	N/A
4	Left Side Panel	N/A	N/A	N/A	N/A	N/A	N/A
5	Blower Division Panel	N/A	N/A	N/A	N/A	N/A	N/A
6	Top Panel	N/A	N/A	N/A	N/A	N/A	N/A
7	Inner Front Panel, Lower	N/A	N/A	N/A	N/A	N/A	N/A
8	Inner Front Panel, Upper	N/A	N/A	N/A	N/A	N/A	N/A
9	Integrated Control Mounting Panel	N/A	N/A	N/A	N/A	N/A	N/A
10	Upper Door Panel	N/A	N/A	N/A	N/A	N/A	N/A
11	Blower Door Support, (Hanger)	N/A	N/A	N/A	N/A	N/A	N/A
	Lower Front Door Hanger	N/A	N/A	N/A	N/A	N/A	N/A
12	Front Door Panel	N/A	N/A	N/A	N/A	N/A	N/A
13	Left Blower Access Door	N/A	N/A	N/A	N/A	N/A	N/A
14	Right Blower Access Door	N/A	N/A	N/A	N/A	N/A	N/A
15	Baffle, Side Panel, (*2 Required*)	N/A	N/A	N/A	N/A	N/A	N/A
16	Heat Exchanger	N/A	N/A	N/A	N/A	N/A	N/A
17	Baffle, Heat Exchanger	-	-	N/A	N/A	N/A	N/A
18	Gasket, Flue Box Cover	26467	26467	26467	26467	N/A	N/A
19	Flue Box Cover	N/A	N/A	N/A	N/A	N/A	N/A
20	Gasket, Extension Tube	N/A	N/A	N/A	N/A	N/A	N/A
21	Extension Tube	N/A	N/A	N/A	N/A	N/A	N/A
	Filter Side Rail (*2 Required*)	N/A	N/A	N/A	N/A	N/A	N/A
22	Filter Upper Support	N/A	N/A	N/A	N/A	N/A	N/A
23	Heat Shield, Upper	N/A	N/A	N/A	N/A	N/A	N/A
24	Heat Shield, Lower	N/A	N/A	N/A	N/A	N/A	N/A
25	Vent Box Assembly	26912	26912	26912	26912	26912	26912
	Electrical & Controls Group						
44	Integrated Control, White-Rodgers 50A55-843	27492	27492	27492	27492	27492	27492
30	Hot Surface Ignitor, Norton 271W, *17 Second Warm-Up*	26789S	26789S	26789S	26789S	26789S	26789S
45	Junction Box	21318	21318	21318	21318	21318	21318
	Junction Box Cover	3011160A	3011160A	3011160A	3011160A	3011160A	3011160A
46	Door Switch, TA22BTLB, SPST	19172	19172	19172	19172	19172	19172
47	Door Switch Bracket	18932	18932	18932	18932	18932	18932

	WHS(M) Series Mid Efficiency Downflow Gas Furnace						
Ref. No.	**Description**	**WHS-45M**	**WHS-60M**	**WHS-75M**	**WHS-90M**	**WHS-105M**	**WHS-120M**
48	Auxiliary Limit Switch, Therm-O-Disc 313576, 60T11 L130°F	27021	27021	27021	27021	27021	27021
32	Flame Roll-Out Switch, 36TR16-6031, 350°F	19292	19292	19292	19292	19292	19292
33	Flame Roll-Out Switch Gasket	N/A	N/A	N/A	N/A	N/A	N/A
49	Pressure Switch						
	FS6676-1328 set at -0.65" w.c.	26513	26513	- - -	- - -	- - -	- - -
	FS6676-1329 set at -0.70" w.c.	- - -	- - -	26514	26514	- - -	- - -
	FS6676-1330 set at -0.85" w.c.	- - -	- - -	- - -	- - -	26515	26515
50	Pressure Switch Tubing, 6", Silicone SR200 1/8" I.D. Clear	11344	11344	11344	11344	11344	11344
	Transformer, 120/24v, 40VA, BE161640REK0028	550001533	550001533	550001533	550001533	550001533	550001533
51	Limit Switch, Therm-O-Disc 36T01B3, 170°F, 42395, 3" Insertion	27387	27387	27387	27387	27387	27387
52	Gasket, Limit Switch	26762	26762	26762	26762	26762	26762
43	Vent Safety Switch, Therm-O-Disc 205952, 60T24, 200°F	N/A	N/A	N/A	N/A	N/A	N/A
	Wiring Harness	N/A	N/A	N/A	N/A	N/A	N/A
	Blower Group						
	Blower Assembly, Complete	N/A	N/A	N/A	N/A	N/A	N/A
26	Blower Housing & Wheel, DC 1020-600-5	N/A	N/A	- - -	- - -	- - -	- - -
26	Blower Housing & Wheel, Morrison 100-8 DD, 05-23655	- - -	- - -	30261	30261	- - -	- - -
26	Blower Housing & Wheel, DC 1020-916-5	- - -	- - -	- - -	- - -	N/A	N/A
	Blower Wheel, for 10-6 blower unavailable	- - -	- - -	- - -	- - -	- - -	- - -
	Blower Wheel, CM1020-800, (10 - 8)	- - -	- - -	26610	26610	- - -	- - -
	Blower Wheel, CM1020-916, (10 - 9)	- - -	- - -	- - -	- - -	27326	27326
27	Blower Motor, 1/3 hp, 4-Speed, PSC, AOS OLE1036	550001987	550001987	550001987	550001987	- - -	- - -
27	Blower Motor, 1/2 hp, 4-Speed, PSC, G.E. 5KCP39LGY723BS	- - -	- - -	- - -	- - -	102000131	102000131
	Alt: Blower 1/2 HP Motor Kit W/ Mounting Hardware, No Capacitor	- - -	- - -	- - -	- - -	27836	27836
	Alt: Blower 1/2 HP Motor Kit W/ Capacitor, No Hardware	- - -	- - -	- - -	- - -	550001530	550001530
	Motor Mounting Band, TR5868	17811	17811	17811	17811	17811	17811
	Motor Mounting Arms, TR6884B, (*3 Required*)	26251	26251	26251	26251	26251	26251
28	Capacitor, 5 mfd @ 370 vac, M22P3705M00	27741	27741	27741	27741	- - -	- - -
28	Capacitor, 12.5 mfd @ 370 vac M22P3712N00	27744	27744	27744	27744	- - -	- - -
28	Capacitor, 10 mfd @ 370 vac, Z23S3710M01N	- - -	- - -	- - -	- - -	27743	27743
	Capacitor Strap, N24B 51045-0013	27760	27760	27760	27760	27760	27760
	Capacitor Insulator	27769	27769	27769	27769	27769	27769
29	Blower Support Angle, (*2 Required*)	N/A	N/A	N/A	N/A	N/A	N/A
	Blower Rear Angle	N/A	N/A	N/A	N/A	N/A	N/A

	WHS(M) Series Mid Efficiency Downflow Gas Furnace						
Ref. No.	**Description**	**WHS-45M**	**WHS-60M**	**WHS-75M**	**WHS-90M**	**WHS-105M**	**WHS-120M**
	Burner Group						
	Burner Assembly, Natural Gas, Complete	N/A	N/A	N/A	N/A	N/A	N/A
	Burner Assembly, L.P. Gas, Complete	N/A	N/A	N/A	N/A	N/A	N/A
30	Hot Surface Ignitor, Norton 271W, *17 Second Warm-Up*	26789S	26789S	26789S	26789S	26789S	26789S
31	Ignitor Bracket	N/A	N/A	N/A	N/A	N/A	N/A
32	Flame Roll-Out Switch, 36TR16-6031, 350°F	19292	19292	19292	19292	19292	19292
33	Flame Roll-Out Switch Gasket	N/A	N/A	N/A	N/A	N/A	N/A
34	Manifold Assembly	N/A	N/A	N/A	N/A	N/A	N/A
35	BSI Ribbon Burner Assembly	16725	16725	10741	10741	16726	16726
36	Gas Valve, Natural Gas, VR8205A2008B	26180	26180	26180	26180	26180	26180
36	Gas Valve, L.P. Gas, VR8205A2016B	26181	26181	26181	26181	26181	26181
	Natural Gas Regulator Spring, *Honeywell 394588*	19021	19021	19021	19021	19021	19021
	L.P. Gas Regulator Spring, *Honeywell 393691*	19020	19020	19020	19020	19020	19020
37	Burner Orifice, Natural Gas						
	WHS-45, No. 43 DMS, (*2 Required*)	3051094B	- - -	- - -	- - -	- - -	- - -
	WHS-60, No. 37 DMS, (*2 Required*)	- - -	N/A	- - -	- - -	- - -	- - -
	WHS-75, No. 41 DMS, (*3 Required*)	- - -	- - -	10357	- - -	- - -	- - -
	WHS-90, No. 37 DMS, (*3 Required*)	- - -	- - -	- - -	N/A	- - -	- - -
	WHS-105, No. 41 DMS, (*4 Required*)	- - -	- - -	- - -	- - -	10357	- - -
	WHS-120, No. 37 DMS, (*4 Required*)	- - -	- - -	- - -	- - -	- - -	N/A
37	Burner Orifice, L.P. Gas						
	WHS-45, No. 54 DMS, (*2 Required*)	N/A	- - -	- - -	- - -	- - -	- - -
	WHS-60, No. 52 DMS, (*2 Required*)	- - -	3051110B	- - -	- - -	- - -	- - -
	WHS-75, No. 53 DMS, (*3 Required*)	- - -	- - -	3051111B	- - -	- - -	- - -
	WHS-90, No. 52 DMS, (*3 Required*)	- - -	- - -	- - -	3051110B	- - -	- - -
	WHS-105, No. 53 DMS, (*4 Required*)	- - -	- - -	- - -	- - -	3051111B	- - -
	WHS-120, No. 52 DMS, (*4 Required*)	- - -	- - -	- - -	- - -	- - -	3051110B
38	Flame Sensor, *Honeywell 272789*	26878	26878	26878	26878	26878	26878
39	Flame Sensor Bracket	21757	21757	21757	21757	21757	21757
23	Heat Shield, Upper	N/A	N/A	N/A	N/A	N/A	N/A
24	Heat Shield, Lower	N/A	N/A	N/A	N/A	N/A	N/A
	Venting Group						
25	Vent Box Assembly	26912	26912	26912	26912	26912	26912
18	Gasket, Flue Box Cover	26467	26467	26467	26467	N/A	N/A
19	Flue Box Cover	N/A	N/A	N/A	N/A	N/A	N/A

	WHS(M) Series Mid Efficiency Downflow Gas Furnace						
Ref. No.	**Description**	**WHS-45M**	**WHS-60M**	**WHS-75M**	**WHS-90M**	**WHS-105M**	**WHS-120M**
20	Gasket, Extension Tube	N/A	N/A	N/A	N/A	N/A	N/A
21	Extension Tube	N/A	N/A	N/A	N/A	N/A	N/A
40	Induced Blower Assembly	26607	26607	26607	26607	26607	26607
41	Gasket, Induced Blower	21873	21873	21873	21873	21873	21873
42	Chute Orifice						
	WHS-45, 1.00 " I.D.	N/A	- - -	- - -	- - -	- - -	- - -
	WHS-60, 1.12 " I.D.	- - -	N/A	- - -	- - -	- - -	- - -
	WHS-75, 1.23 " I.D.	- - -	- - -	N/A	- - -	- - -	- - -
	WHS-90, 1.40 " I.D.	- - -	- - -	- - -	N/A	- - -	- - -
	WHS-105, 1.50 " I.D.	- - -	- - -	- - -	- - -	N/A	- - -
	WHS-120, 1.60 " I.D.	- - -	- - -	- - -	- - -	- - -	N/A
43	Vent Safety Switch, Therm-O-Disc 205952, 60T24, 200°F	N/A	N/A	N/A	N/A	N/A	N/A
	Miscellaneous Group						
53	Air Filter, 12 x 18 x 1, Semi-Permanent, (*2 Required*)	N/A	N/A	N/A	N/A	N/A	N/A
	Installation, Operation & Maintenance Manual	N/A	N/A	N/A	N/A	N/A	N/A
	Conversion Kit, Natural Gas to L.P. Gas	N/A	N/A	N/A	N/A	N/A	N/A
	Conversion Kit, L.P. Gas to Natural Gas	N/A	N/A	N/A	N/A	N/A	N/A
	Sub-Base Assembly	N/A	N/A	N/A	N/A	N/A	N/A

WHS(M) Series Mid Efficiency Downflow Gas Furnace

Specifications

Natural Gas and Propane:

Model	Ratings BTU/HR		Main Blower	External Static Pressure Direct Drive		Cooling Capacity			AFUE
	Input	Output		.20 W.C.	.50 W.C.	Tons	HP	MAX CFM	
WHS 45M	45,000	37,400	10-6T	M.LO	M.HI	2	1/3	925	80
WHS 60M	60,000	49,800	10-6T	M.HI	HI	2-1/2	1/3	1076	80
WHS 75M	75,000	62,300	10-8T	M.HI	M.HI	3	1/3	900-1255	80
WHS 90M	90,000	74,700	10-8T	M.HI	HI	3	1/3	900-1255	79
WHS 105M	105,000	87,200	10-9T	M.HI	HI	3 - 3-1/2	1/2	1200-1400	79
WHS 120M	120,000	99,600	10-9T	M.HI	HI	3 - 3-1/2	1/2	1200-1400	78.6

Dimensions

Model	Cabinet			Return Plenum (FxG)	Warm Air Plenum (ExD)	Air Filter	Vent Dia.	Clearances					Shipping WT. LBS.
	Width A	Depth B	HT. C					Top	Front	Sides	Back	Vent	
WHS 45-120M	17-1/2	28	52	16x18-1/4	14x16	18x12-1/2x1	3-4	1	6	1	6	6	195