MM Series - Mid-Efficiency Multi-Positional Gas-Fired Furnace (Consolidated)

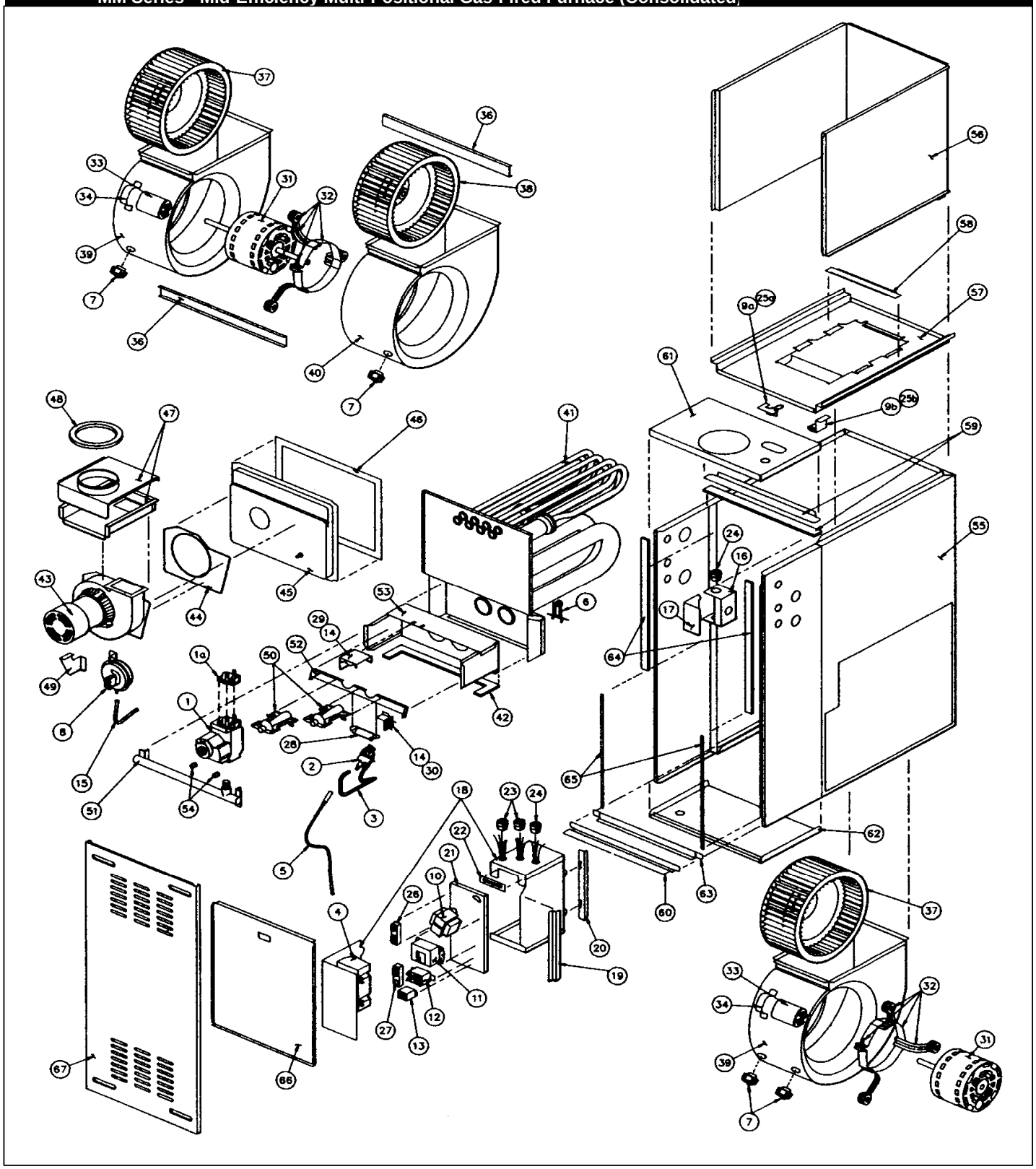

	MM Series - Mid-Efficiency Multi-Positional Gas-Fired Furnace (Consolidated)								
		40000	40000	60000	60000	60000	80000	80000	80000
Ref #	**Description**	**MM 0401**	**MM 0402**	**MM 0601**	**MM 0602**	**MM 0603**	**MM 0801**	**MM 0802**	**MM 0803**
	Note: Canadian Models have "C" Suffix	1/4 hp	1/3 hp	1/4 hp	1/3 hp	1/2 hp	1/4 hp	1/3 hp	1/2 hp
	Consolidated Reference No.	040-2	040-3	060-2	060-3	060-4	080-2	080-3	080-4
	Controls Group								
1	Gas Control, Natural Gas, Honeywell VR8204M8005	N/A	N/A	N/A	N/A	N/A	N/A	N/A	N/A
	Nat. Gas Regulator Spring, Honeywell 394588	19021	19021	19021	19021	19021	19021	19021	19021
	L.P. Gas Regulator Spring, Honeywell 393691	19020	19020	19020	19020	19020	19020	19020	19020
1a	Inlet Gas Connector	C4085300	C4085300	C4085300	C4085300	C4085300	C4085300	C4085300	C4085300
2	Pilot/Ignitor, Honeywell Q345A-1990	C4049800	C4049800	C4049800	C4049800	C4049800	C4049800	C4049800	C4049800
3	Pilot Tubing	N/A	N/A	N/A	N/A	N/A	N/A	N/A	N/A
4	Ignition Lockout Module, Honeywell S8600H	21452	21452	21452	21452	21452	21452	21452	21452
5	Ignition Lockout Module Ignition Wire	21455	21455	21455	21455	21455	21455	21455	21455
	Electronic Group Controls								
6	Primary Limit Switch	C4035000	C4035001	C4035000	C4035001	C4035001	C4035001	C4035000	C4035001
7	Auxiliary Limit Switch	C4034700	C4034700	N/A	C4034700	C4034703	C4034702	C4034700	C4034702
8	Pressure Switch	C4026900	C4026900	C4026900	C4026900	C4026900	C4026900	C4026900	C4026900
9 a	Power Disconnect OR	N/A	N/A	N/A	N/A	N/A	N/A	N/A	N/A
9 b	Blower Door Switch	N/A	N/A	N/A	N/A	N/A	N/A	N/A	N/A
10	Transformer, 40VA	C4033200	C4033200	C4033200	C4033200	C4033200	C4033200	C4033200	C4033200
11	Time Delay Relay Switch	C4033500	C4033500	C4033500	C4033500	C4033500	C4033500	C4033500	C4033500
12	Blower Relay	C4034100	C4034100	C4034100	C4034100	C4034100	C4034100	C4034100	C4034100
13	Inducer Motor Relay	C4033800	C4033800	C4033800	C4033800	C4033800	C4033800	C4033800	C4033800
14	Burner Limit Switch	C4035300	C4035300	C4035300	C4035300	C4035300	C4035300	C4035300	C4035300
	Hardware								
15	Pressure Switch Tubing	N/A	N/A	N/A	N/A	N/A	N/A	N/A	N/A
16	Junction Box	N/A	N/A	N/A	N/A	N/A	N/A	N/A	N/A
17	Junction Box Cover	N/A	N/A	N/A	N/A	N/A	N/A	N/A	N/A
18	Control Box	N/A	N/A	N/A	N/A	N/A	N/A	N/A	N/A
19	Control Box Front Mounting Bracket	N/A	N/A	N/A	N/A	N/A	N/A	N/A	N/A
20	Control Box Rear Mounting Bracket	N/A	N/A	N/A	N/A	N/A	N/A	N/A	N/A
21	Component Base	N/A	N/A	N/A	N/A	N/A	N/A	N/A	N/A
22	Terminal Strip	N/A	N/A	N/A	N/A	N/A	N/A	N/A	N/A
23	Strain Relief	N/A	N/A	N/A	N/A	N/A	N/A	N/A	N/A
24	Strain Relief	N/A	N/A	N/A	N/A	N/A	N/A	N/A	N/A
25 a	Disconnect Bracket, OR	N/A	N/A	N/A	N/A	N/A	N/A	N/A	N/A
25 b	Blower Door Switch Bracket	N/A	N/A	N/A	N/A	N/A	N/A	N/A	N/A
26	Terminal Blocks (*Low Voltage*)	N/A	N/A	N/A	N/A	N/A	N/A	N/A	N/A
27	Terminal Blocks (*High Voltage*)	N/A	N/A	N/A	N/A	N/A	N/A	N/A	N/A
	Wire Harness Kit, (*All wires except blower wires*)	N/A	N/A	N/A	N/A	N/A	N/A	N/A	N/A
28	Pilot Mounting Bracket	C405320	C405320	C405320	C405320	C405320	C405320	C405320	C405320
29	Upper Burner Limit Switch Bracket	C401180	C401180	C401180	C401180	C401180	C401180	C401180	C401180

	MM Series - Mid-Efficiency Multi-Positional Gas-Fired Furnace (Consolidated)								
		40000	40000	60000	60000	60000	80000	80000	80000
Ref #	**Description**	**MM 0401**	**MM 0402**	**MM 0601**	**MM 0602**	**MM 0603**	**MM 0801**	**MM 0802**	**MM 0803**
	Note: Canadian Models have "C" Suffix	1/4 hp	1/3 hp	1/4 hp	1/3 hp	1/2 hp	1/4 hp	1/3 hp	1/2 hp
	Consolidated Reference No.	040-2	040-3	060-2	060-3	060-4	080-2	080-3	080-4
30	Lower Burner Limit Switch Bracket	C402250	C402250	C402250	C402250	C402250	C402250	C402250	C402250
	Blower Group								
	Blower Assembly	N/A	N/A	N/A	N/A	C4048502	N/A	N/A	C4048502
31	Blower Motor	N/A	N/A	N/A	N/A	C4037002	N/A	N/A	C4037002
32	Motor Mounting Kit	C4038701	C4038701	C4038701	C4038701	C4038701	C4038701	C4038701	C4038700
33	Capacitor	C4036000	C4036000	C4036000	C4036000	C4036000	C4036000	C4036000	C4036000
34	Capacitor Strap	N/A	N/A	N/A	N/A	N/A	N/A	N/A	N/A
35	*not used*								
36	Blower Housing Support	N/A	N/A	N/A	N/A	N/A	N/A	N/A	N/A
37	Blower Wheel, Direct Drive, (Convex)	C4039500	C4039502	C4039500	C4039502	C4039504	C4039500	C4039502	C4039504
38	Blower Wheel, Direct Drive, (Concave)	N/A	N/A	N/A	N/A	N/A	N/A	N/A	N/A
39	Blower Housing	C4044700	N/A	C4044700	N/A	N/A	C4044700	N/A	N/A
40	Blower Housing	N/A	N/A	N/A	N/A	N/A	N/A	N/A	N/A
	Heat Exchanger Group								
41	Heat Exchanger Assembly	N/A	N/A	N/A	N/A	N/A	N/A	N/A	N/A
42	Bottom Bulkhead Gasket	N/A	N/A	N/A	N/A	N/A	N/A	N/A	N/A
	Draft Inducer Group								
43	Draft Inducer Motor Assembly	C4026600	C4026600	C4026600	C4026600	C4026600	C4026600	C4026600	C4026600
44	Draft Inducer Motor Gasket	N/A	N/A	N/A	N/A	N/A	N/A	N/A	N/A
45	Inducer Pan Assembly	C401340	C401340	C401341	C401341	N/A	C401342	C401342	C401344
46	Inducer Pan Gasket	N/A	N/A	N/A	N/A	N/A	N/A	N/A	N/A
47	Flue Box	N/A	N/A	C4042301	C4042301	C4042301	C4042301	C4042301	C4042301
48	Vent Gasket	N/A	N/A	N/A	N/A	N/A	N/A	N/A	N/A
49	Flue Box Support	C401320	C401320	C401320	C401320	C401320	C401320	C401320	C401320
	Burner Group								
50	Main Burner	C4036500	C4036500	C4036500	C4036500	C4036500	C4036500	C4036500	C4036500
51	Manifold	N/A	N/A	C400111	C400111	C400111	C400112	C400112	C400112
52	Main Burner Mount	N/A	N/A	C400041	C400041	C400041	N/A	N/A	N/A
53	Venturi Plate	N/A	N/A	C400682	C400682	C400682	N/A	N/A	N/A
54	Main Burner Orifices	N/A	N/A	N/A	N/A	N/A	N/A	N/A	N/A
	Main Burner Orifices, Cdn. High Altitude	N/A	N/A	N/A	N/A	N/A	N/A	N/A	N/A
	Venturi & Manifold	N/A	N/A	N/A	N/A	N/A	N/A	N/A	N/A
	Casing Group								
55	Casing	N/A	N/A	N/A	N/A	N/A	N/A	N/A	N/A
56	Radiation Shield Assembly	N/A	N/A	N/A	N/A	N/A	N/A	N/A	N/A

	MM Series - Mid-Efficiency Multi-Positional Gas-Fired Furnace (Consolidated)								
		40000	40000	60000	60000	60000	80000	80000	80000
Ref #	**Description**	**MM 0401**	**MM 0402**	**MM 0601**	**MM 0602**	**MM 0603**	**MM 0801**	**MM 0802**	**MM 0803**
	Note: Canadian Models have "C" Suffix	1/4 hp	1/3 hp	1/4 hp	1/3 hp	1/2 hp	1/4 hp	1/3 hp	1/2 hp
	Consolidated Reference No.	040-2	040-3	060-2	060-3	060-4	080-2	080-3	080-4
57	Blower Deck	N/A	N/A	N/A	N/A	N/A	N/A	N/A	N/A
58	Air Baffle	N/A	N/A	N/A	N/A	N/A	N/A	N/A	N/A
59	Insulated Duct Flange	N/A	N/A	N/A	N/A	N/A	N/A	N/A	N/A
60	Door Channel	N/A	N/A	N/A	N/A	N/A	N/A	N/A	N/A
61	Top Plate Assembly	N/A	N/A	N/A	N/A	N/A	N/A	N/A	N/A
62	Base Panel	C400460	C400460	C400460	C400460	N/A	C400460	C400460	N/A
63	Base Support	N/A	N/A	N/A	N/A	N/A	N/A	N/A	N/A
64	Hem Gaskets	N/A	N/A	N/A	N/A	N/A	N/A	N/A	N/A
65	Door Gaskets	N/A	N/A	N/A	N/A	N/A	N/A	N/A	N/A
	Accessory Group								
66	Blower Door (U.S.)	N/A	N/A	N/A	N/A	N/A	N/A	N/A	N/A
67	Outer Door (U.S.)	N/A	N/A	N/A	N/A	N/A	N/A	N/A	N/A
68	Bottom Closures (10) Upflow	C4045900	C4045900	C4045900	C4045900	C4045901	C4045900	C4045900	C4045901
69	Filters (10) 14 x 25 Upflow	N/A	N/A	N/A	N/A	N/A	N/A	N/A	N/A
70	Filters (10) 16 x 25 Upflow	N/A	N/A	N/A	N/A	N/A	N/A	N/A	N/A
71	Filters (10) 20 x 25 Upflow	N/A	N/A	N/A	N/A	N/A	N/A	N/A	N/A
72	Filters (10) 16 x 20 (All Downflow)	N/A	N/A	N/A	N/A	N/A	N/A	N/A	N/A
73	Combustion Floor Base (10) (Downflow)	N/A	N/A	N/A	N/A	N/A	N/A	N/A	N/A
74	Bottom Filter Box (Upflow)	C4046600	C4046600	C4046600	C4046600	C4046601	C4046600	C4046600	C4046601
75	Side Filter Cabinet (Upflow)	N/A	N/A	N/A	N/A	N/A	N/A	N/A	N/A
76	Downflow Filter Kit	N/A	N/A	N/A	N/A	N/A	N/A	N/A	N/A
77	Nat. to L.P. Conversion Kit (U.S.)	C4026300	C4026300	C4026300	C4026300	C4026300	C4026300	C4026300	C4026300
78	L.P. to Nat. Conversion Kit (U.S.)	C4038200	C4038200	C4038200	C4038200	C4038200	C4038200	C4038200	C4038200
79	California Nox Screen	N/A	N/A	N/A	N/A	N/A	N/A	N/A	N/A
80	High Altitude Kit, Above 6000 Feet	N/A	N/A	N/A	N/A	N/A	N/A	N/A	N/A
81	High Temperature Plastic Vent Support	C4099500	C4099500	C4099500	C4099500	C4099500	C4099500	C4099500	C4099500
	Nat. to L.P. Conversion Kit (Cdn.)								
	L.P. to Nat. Conversion Kit (Cdn.)								
	High Altitude Kit, Canada, 2000 - 4500 Feet	C4068300	C4068300	C4068300	C4068300	C4068300	C4068300	C4068300	C4068300

	MM Series - Mid-Efficiency Multi-Positional Gas-F								
		80000	100000	100000	100000	120000	120000	140000	140000
Ref #	**Description**	**MM 0804**	**MM 1001**	**MM 1002**	**MM 1003**	**MM 1201**	**MM 1202**	**MM 1401**	**MM 1402**
	Note: Canadian Models have "C" Suffix	3/4 hp	1/3 hp	1/2 hp	3/4 hp	1/2 hp	3/4 hp	3/4 hp	3/4 hp
	Consolidated Reference No.	080-5	100-3	100-4	100-5	120-4	120-5	140-4	140-5
	Controls Group								
1	Gas Control, Natural Gas, Honeywell VR8204M8005	N/A	N/A	N/A	N/A	N/A	N/A	N/A	N/A
	Nat. Gas Regulator Spring, Honeywell 394588	19021	19021	19021	19021	19021	19021	19021	19021
	L.P. Gas Regulator Spring, Honeywell 393691	19020	19020	19020	19020	19020	19020	19020	19020
1a	Inlet Gas Connector	C4085300	C4085300	C4085300	C4085300	C4085300	C4085300	C4085300	C4085300
2	Pilot/Ignitor, Honeywell Q345A-1990	C4049800	C4049800	C4049800	C4049800	C4049800	C4049800	C4049800	C4049800
3	Pilot Tubing	N/A	N/A	N/A	N/A	N/A	N/A	N/A	N/A
4	Ignition Lockout Module, Honeywell S8600H	21452	21452	21452	21452	21452	21452	21452	21452
5	Ignition Lockout Module Ignition Wire	21455	21455	21455	21455	21455	21455	21455	21455
	Electronic Group Controls								
6	Primary Limit Switch	C4035000	C4035001	C4035000	C4035000	C4035000	C4035000	C4035000	C4035001
7	Auxiliary Limit Switch	C4034700	C4034702	C4034701	C4034703	C4034701	C4034702	C4034701	C4034703
8	Pressure Switch	C4026900	C4026900	C4026900	C4026900	C4026900	C4026900	C4026900	C4026900
9 a	Power Disconnect OR	N/A	N/A	N/A	N/A	N/A	N/A	N/A	N/A
9 b	Blower Door Switch	N/A	N/A	N/A	N/A	N/A	N/A	N/A	N/A
10	Transformer, 40VA	C4033200	C4033200	C4033200	C4033200	C4033200	C4033200	C4033200	C4033200
11	Time Delay Relay Switch	C4033500	C4033500	C4033500	C4033500	C4033500	C4033500	C4033500	C4033500
12	Blower Relay	C4034100	C4034100	C4034100	C4034100	C4034100	C4034100	C4034100	C4034100
13	Inducer Motor Relay	C4033800	C4033800	C4033800	C4033800	C4033800	C4033800	C4033800	C4033800
14	Burner Limit Switch	C4035300	C4035300	C4035300	C4035300	C4035300	C4035300	C4035300	C4035300
	Hardware								
15	Pressure Switch Tubing	N/A	N/A	N/A	N/A	N/A	N/A	N/A	N/A
16	Junction Box	N/A	N/A	N/A	N/A	N/A	N/A	N/A	N/A
17	Junction Box Cover	N/A	N/A	N/A	N/A	N/A	N/A	N/A	N/A
18	Control Box	N/A	N/A	N/A	N/A	N/A	N/A	N/A	N/A
19	Control Box Front Mounting Bracket	N/A	N/A	N/A	N/A	N/A	N/A	N/A	N/A
20	Control Box Rear Mounting Bracket	N/A	N/A	N/A	N/A	N/A	N/A	N/A	N/A
21	Component Base	N/A	N/A	N/A	N/A	N/A	N/A	N/A	N/A
22	Terminal Strip	N/A	N/A	N/A	N/A	N/A	N/A	N/A	N/A
23	Strain Relief	N/A	N/A	N/A	N/A	N/A	N/A	N/A	N/A
24	Strain Relief	N/A	N/A	N/A	N/A	N/A	N/A	N/A	N/A
25 a	Disconnect Bracket, OR	N/A	N/A	N/A	N/A	N/A	N/A	N/A	N/A
25 b	Blower Door Switch Bracket	N/A	N/A	N/A	N/A	N/A	N/A	N/A	N/A
26	Terminal Blocks (*Low Voltage*)	N/A	N/A	N/A	N/A	N/A	N/A	N/A	N/A
27	Terminal Blocks (*High Voltage*)	N/A	N/A	N/A	N/A	N/A	N/A	N/A	N/A
	Wire Harness Kit, (*All wires except blower wires*)	N/A	N/A	N/A	N/A	N/A	N/A	N/A	N/A
28	Pilot Mounting Bracket	C405320	C405320	C405320	C405320	C405320	C405320	C405320	C405320
29	Upper Burner Limit Switch Bracket	C401180	C401180	C401180	C401180	C401180	C401180	C401180	C401180

	MM Series - Mid-Efficiency Multi-Positional Gas-F								
		80000	100000	100000	100000	120000	120000	140000	140000
Ref #	**Description**	**MM 0804**	**MM 1001**	**MM 1002**	**MM 1003**	**MM 1201**	**MM 1202**	**MM 1401**	**MM 1402**
	Note: Canadian Models have "C" Suffix	3/4 hp	1/3 hp	1/2 hp	3/4 hp	1/2 hp	3/4 hp	3/4 hp	3/4 hp
	Consolidated Reference No.	080-5	100-3	100-4	100-5	120-4	120-5	140-4	140-5
30	Lower Burner Limit Switch Bracket	C402250	C402250	C402250	C402250	C402250	C402250	C402250	C402250
	Blower Group								
	Blower Assembly	C4048900	N/A	C4048502	C4048900	C4048502	C4048900	C4048900	C4048901
31	Blower Motor	C4037300	N/A	C4037002	C4037300	C4037002	C4037300	C4037300	C4037300
32	Motor Mounting Kit	C4038701	C4038701	C4038700	C4038701	C4038700	C4038701	C4038701	C4038701
33	Capacitor	C4036001	C4036000	C4036000	C4036001	C4036000	C4036001	C4036001	C4036001
34	Capacitor Strap	N/A	N/A	N/A	N/A	N/A	N/A	N/A	N/A
35	*not used*								
36	Blower Housing Support	N/A	N/A	N/A	N/A	N/A	N/A	N/A	N/A
37	Blower Wheel, Direct Drive, (Convex)	C4039500	C4039502	C4039504	C4039500	C4039504	C4039500	C4039500	C4039502
38	Blower Wheel, Direct Drive, (Concave)	C4039501	N/A	N/A	C4039501	N/A	C4039501	C4039501	N/A
39	Blower Housing	N/A	N/A	N/A	N/A	N/A	N/A	N/A	N/A
40	Blower Housing	N/A	N/A	N/A	N/A	N/A	N/A	N/A	N/A
	Heat Exchanger Group								
41	Heat Exchanger Assembly	N/A	N/A	N/A	N/A	N/A	N/A	N/A	N/A
42	Bottom Bulkhead Gasket	N/A	N/A	N/A	N/A	N/A	N/A	N/A	N/A
	Draft Inducer Group								
43	Draft Inducer Motor Assembly	C4026600	C4118300	C4118300	C4118300	C4118300	C4118300	C4118300	C4118300
44	Draft Inducer Motor Gasket	N/A	N/A	N/A	N/A	N/A	N/A	N/A	N/A
45	Inducer Pan Assembly	N/A	C401345	C401345	N/A	C401348	C401348	N/A	N/A
46	Inducer Pan Gasket	N/A	N/A	N/A	N/A	N/A	N/A	N/A	N/A
47	Flue Box	C4042301	C4042301	C4042301	C4042301	C4042301	C4042301	C4042301	C4042301
48	Vent Gasket	N/A	N/A	N/A	N/A	N/A	N/A	N/A	N/A
49	Flue Box Support	C401320	C401320	C401320	C401320	C401320	C401320	C401320	C401320
	Burner Group								
50	Main Burner	C4036500	C4036500	C4036500	C4036500	C4036500	C4036500	C4036500	C4036500
51	Manifold	C400112	C400113	N/A	C400113	N/A	N/A	N/A	N/A
52	Main Burner Mount	N/A	C400043	C400043	C400043	N/A	N/A	N/A	N/A
53	Venturi Plate	N/A	N/A	N/A	N/A	N/A	N/A	C400685	C400685
54	Main Burner Orifices	N/A	N/A	N/A	N/A	N/A	N/A	N/A	N/A
	Main Burner Orifices, Cdn. High Altitude	N/A	N/A	N/A	N/A	N/A	N/A	N/A	N/A
	Venturi & Manifold	N/A	N/A	N/A	N/A	N/A	N/A	N/A	N/A
	Casing Group								
55	Casing	N/A	N/A	N/A	N/A	N/A	N/A	N/A	N/A
56	Radiation Shield Assembly	N/A	N/A	N/A	N/A	N/A	N/A	N/A	N/A

	MM Series - Mid-Efficiency Multi-Positional Gas-F								
		80000	100000	100000	100000	120000	120000	140000	140000
Ref #	**Description**	**MM 0804**	**MM 1001**	**MM 1002**	**MM 1003**	**MM 1201**	**MM 1202**	**MM 1401**	**MM 1402**
	Note: Canadian Models have "C" Suffix	3/4 hp	1/3 hp	1/2 hp	3/4 hp	1/2 hp	3/4 hp	3/4 hp	3/4 hp
	Consolidated Reference No.	080-5	100-3	100-4	100-5	120-4	120-5	140-4	140-5
57	Blower Deck	N/A	N/A	N/A	N/A	N/A	N/A	N/A	N/A
58	Air Baffle	N/A	N/A	N/A	N/A	N/A	N/A	N/A	N/A
59	Insulated Duct Flange	C401672	N/A	N/A	C401672	C401672	C401672	N/A	N/A
60	Door Channel	N/A	N/A	N/A	N/A	N/A	N/A	N/A	N/A
61	Top Plate Assembly	N/A	N/A	N/A	N/A	N/A	N/A	N/A	N/A
62	Base Panel	N/A	N/A	N/A	N/A	N/A	N/A	C400463	C400463
63	Base Support	N/A	N/A	N/A	N/A	N/A	N/A	N/A	N/A
64	Hem Gaskets	N/A	N/A	N/A	N/A	N/A	N/A	N/A	N/A
65	Door Gaskets	N/A	N/A	N/A	N/A	N/A	N/A	N/A	N/A
	Accessory Group								
66	Blower Door (U.S.)	N/A	N/A	N/A	N/A	N/A	N/A	C4099803	C4099803
67	Outer Door (U.S.)	N/A	N/A	N/A	N/A	N/A	N/A	N/A	N/A
68	Bottom Closures (10) Upflow	C4045902	C4045901	C4045901	C4045902	C4045902	C4045902	C4045903	C4045903
69	Filters (10) 14 x 25 Upflow	N/A	N/A	N/A	N/A	N/A	N/A	N/A	N/A
70	Filters (10) 16 x 25 Upflow	N/A	N/A	N/A	N/A	N/A	N/A	N/A	N/A
71	Filters (10) 20 x 25 Upflow	N/A	N/A	N/A	N/A	N/A	N/A	N/A	N/A
72	Filters (10) 16 x 20 (All Downflow)	N/A	N/A	N/A	N/A	N/A	N/A	N/A	N/A
73	Combustion Floor Base (10) (Downflow)	N/A	N/A	N/A	N/A	N/A	N/A	N/A	N/A
74	Bottom Filter Box (Upflow)	C4046602	C4046601	C4046601	C4046602	C4046602	C4046602	C4046603	C4046603
75	Side Filter Cabinet (Upflow)	N/A	N/A	N/A	N/A	N/A	N/A	N/A	N/A
76	Downflow Filter Kit	N/A	N/A	N/A	N/A	N/A	N/A	N/A	N/A
77	Nat. to L.P. Conversion Kit (U.S.)	C4026300	C4026300	C4026300	C4026300	C4026300	C4026300	C4026300	C4026300
78	L.P. to Nat. Conversion Kit (U.S.)	C4038200	C4038200	C4038200	C4038200	C4038200	C4038200	C4038200	C4038200
79	California Nox Screen	N/A	N/A	N/A	N/A	N/A	N/A	N/A	N/A
80	High Altitude Kit, Above 6000 Feet	N/A	N/A	N/A	N/A	N/A	N/A	N/A	N/A
81	High Temperature Plastic Vent Support	C4099500	C4099500	C4099500	C4099500	C4099500	C4099500	C4099500	C4099500
	Nat. to L.P. Conversion Kit (Cdn.)								
	L.P. to Nat. Conversion Kit (Cdn.)								
	High Altitude Kit, Canada, 2000 - 4500 Feet	C4068300	C4068300	C4068300	C4068300	C4068300	C4068300	C4068300	C4068300

MM Series - Mid-Efficiency Multi-Positional Gas-Fired Furnace (Consolidated)

Specifications

Model Number	Input	Output	AFUE	Motor HP Type/Speed	Blower Size	Temp Rise	Motor FLA	Motor Speed	Tons A/C @ .5	CFM vs External Static Pressure .1	.2	.3	.4	.5	.6
MM0402	40,000	32,000	78%	1/3 PSC 4 spd	10-6	30-60	6.5	HI	3.0	1500	1450	1380	1340	1265	1180
								MH	2.5	1200	1160	1130	1100	1040	980
								ML	2.0	920	905	875	850	810	770
								LO	1.5	705	690	670	640	615	560
MM0602	60,000	48,000	78%	1/3 PSC 4 spd	10-6	45-75	6.7	HI	3.0	1485	1435	1375	1340	1260	1170
								MH	2.5	1175	1160	1125	1070	1035	970
								ML	2.0	900	880	860	840	800	760
								LO	1.5	690	675	650	625	600	565
MM0802	80,000	64,000	78%	1/3 PSC 4 spd	10-6	40-70	6.5	HI	3.0	1500	1445	1390	1320	1230	1150
								MH	2.5	1200	1170	1135	1095	1035	970
								ML	2.0	920	900	870	850	810	775
								LO	1.5	705	690	670	635	620	570
MM1001	100,000	80,000	78%	1/3 PSC 4 spd	10-6	55-85	6.4	HI	3.0	1525	1475	1425	1340	1250	1165
								MH	2.5	1240	1220	1175	1130	1060	1000
								ML	2.0	965	955	935	900	860	800
								LO	1.5	750	735	720	690	650	620
MM1201	120,000	96,000	78%	1/2 PSC 4 spd	10-8	45-75	8.0	HI	4.0	1960	1910	1815	1735	1655	1550
								MH	3.5	1575	1575	1540	1475	1440	1355
								ML	3.0	1255	1275	1285	1265	1245	1200
								LO	2.5	975	1005	1045	1050	1040	1010
MM1402	140,000	112,000	78%	3/4 PSC 4 spd	Dual 10-6	50-80	9.4	HI	5.5	2445	2400	2390	2360	2235	2100
								MH	4.0	1725	1750	1765	1750	1715	1650
								ML	3.5	1375	1415	1440	1440	1440	1410
								LO	3.0	1110	1150	1190	1210	1200	1190

Dimensions

Model Number	Shipping Wt.	Vent	Width	Supply Opening	Return Opening	Vent Kit Req'd
MM0402	102	3"	14 1/2	12 15/16	12 3/4	No
MM0602	107	4"	14 1/2	12 15/16	12 3/4	No
MM0802	112	4"	14 1/2	12 15/16	12 3/4	No
MM1001	122	4"	17 1/2	15 15/16	15 3/4	No
MM1201	145	5"	20 1/2	18 15/16	18 3/4	Yes
MM1402	153	5"	23 1/2	21 15/16	21 3/4	Yes