HHS(M) Series Mid Efficiency Highboy Gas Furnace

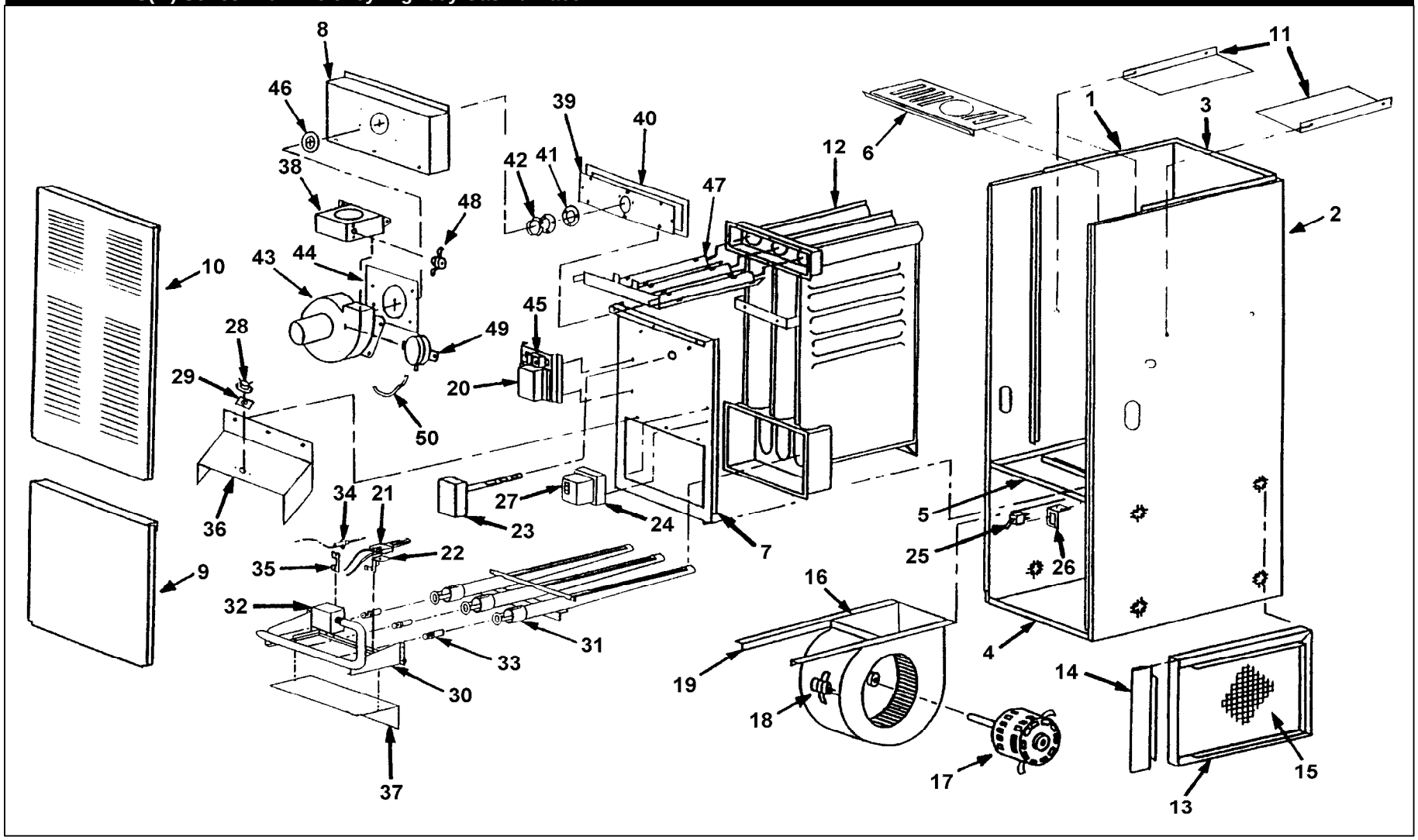

	HHS(M) Series Mid Efficiency Highboy Gas Furnace						
Ref. No.	**Description**	**HHS-45M**	**HHS-60M**	**HHS-75M**	**HHS-90M**	**HHS-105M**	**HHS-120M**
	Sheet Metal Group						
1	Left Side Panel	N/A	N/A	N/A	N/A	N/A	N/A
2	Right Side Panel	N/A	N/A	N/A	N/A	N/A	N/A
3	Rear Panel	N/A	N/A	N/A	N/A	N/A	N/A
4	Base Panel	N/A	N/A	N/A	N/A	N/A	N/A
5	Blower Division Panel	N/A	N/A	N/A	N/A	N/A	N/A
6	Top Panel	N/A	N/A	N/A	N/A	N/A	N/A
7	Inner Front Panel, Lower	N/A	N/A	N/A	N/A	N/A	N/A
8	Inner Front Panel, Upper	N/A	N/A	N/A	N/A	N/A	N/A
	Controls Mounting Panel	N/A	N/A	N/A	N/A	N/A	N/A
	Integrated Control Mounting Panel	- - -	- - -	N/A	N/A	N/A	N/A
9	Blower Door Panel	N/A	N/A	N/A	N/A	N/A	N/A
10	Front Door Panel	N/A	N/A	N/A	N/A	N/A	N/A
11	Baffle, Side Panel, (*2 Required*)	N/A	N/A	N/A	N/A	N/A	N/A
12	Heat Exchanger	N/A	N/A	N/A	N/A	N/A	N/A
47	Baffle, Heat Exchanger	- - -	- - -	N/A	N/A	N/A	N/A
13	Filter Frame	N/A	N/A	18020	18020	18020	18020
14	Filter Frame End Support	5592B1	5592B1	5592B2	5592B2	5592B2	5592B2
	Electrical & Controls Group						
	Note: Units manufactured until Nov. 1994 were equipped with a HSI Ignition System, L6064A Fan/Limit and a Fan Center.						
20	Hot Surface Ignition Control, White-Rodgers 50E47-843	20837	20837	20837	20837	20837	20837
21	Hot Surface Ignitor, Norton 201W, *45 Second Warm-Up*	20834	20834	20834	20834	20834	20834
23	Fan / Limit Control, Honeywell L6064A, 8 Inch Insertion						
	HHS-45, Limit set to 180°F	12399	- - -	- - -	- - -	- - -	- - -
	HHS-60, Limit set to 200°F	- - -	26511	- - -	- - -	- - -	- - -
	HHS-75, Limit set to 150°F	- - -	- - -	26908	- - -	- - -	- - -
	HHS-90, Limit set to 170°F	- - -	- - -	- - -	26907	- - -	- - -
	HHS-105, Limit set to 190°F	- - -	- - -	- - -	- - -	N/A	- - -
	HHS-120, Limit set to 190°F	- - -	- - -	- - -	- - -	- - -	N/A
24	Junction Box	21318	21318	21318	21318	21318	21318
25	Door Switch, TA22BTLB, SPST	19172	19172	19172	19172	19172	19172
26	Door Switch Bracket	18932	18932	18932	18932	18932	18932
27	Fan Center, (*SPDT switching & 40 VA Transformer*)	27740	27740	27740	27740	27740	27740
	Fan Center Replacement Relay	27767	27767	27767	27767	27767	27767
28	Flame Roll-Out Switch, 36TR16-6031, 350°F	19292	19292	19292	19292	19292	19292
29	Flame Roll-Out Switch Gasket						
45	Induced Blower Relay, 9400-11Q, *SPST, 24v Coil*	27739	27739	27739	27739	27739	27739

	HHS(M) Series Mid Efficiency Highboy Gas Furnace						
Ref. No.	**Description**	**HHS-45M**	**HHS-60M**	**HHS-75M**	**HHS-90M**	**HHS-105M**	**HHS-120M**
48	Vent Safety Switch, Therm-O-Disc 60T24, 200°F	N/A	N/A	N/A	N/A	N/A	N/A
49	Pressure Switch						
	FS6676-1328 set at -0.65" w.c.	26513	26513	- - -	- - -	- - -	- - -
	FS6676-1329 set at -0.70" w.c.	- - -	- - -	26514	26514	- - -	- - -
	FS6676-1330 set at -0.85" w.c.	- - -	- - -	- - -	- - -	26515	26515
50	Pressure Switch Tubing, 6", Silicone SR200 1/8" I.D. Clear	11344	11344	11344	11344	11344	11344
	Note: Units manufactured after Nov. 1994 were equipped with an Integrated Control and Therm-O-Disc Limit.						
20	Integrated Control, White-Rodgers 50A55-843	27492	27492	27492	27492	27492	27492
21	Hot Surface Ignitor, Norton 271W, *17 Second Warm-Up*	26789S	26789S	26789S	26789S	26789S	26789S
24	Junction Box	21318	21318	21318	21318	21318	21318
25	Door Switch, TA22BTLB, SPST	19172	19172	19172	19172	19172	19172
26	Door Switch Bracket	18932	18932	18932	18932	18932	18932
28	Flame Roll-Out Switch, 36TR16-6031, 350°F	19292	19292	19292	19292	19292	19292
29	Flame Roll-Out Switch Gasket	N/A	N/A	N/A	N/A	N/A	N/A
48	Vent Safety Switch, Therm-O-Disc 205952, 60T24, 200°F	N/A	N/A	N/A	N/A	N/A	N/A
49	Pressure Switch						
	FS6676-1328 set at -0.65" w.c.	26513	26513	- - -	- - -	- - -	- - -
	FS6676-1329 set at -0.70" w.c.	- - -	- - -	26514	26514	- - -	- - -
	FS6676-1330 set at -0.85" w.c.	- - -	- - -	- - -	- - -	26515	26515
50	Pressure Switch Tubing, 6", Silicone SR200 1/8" I.D. Clear	11344	11344	11344	11344	11344	11344
	Junction Box Cover	3011160A	3011160A	3011160A	3011160A	3011160A	3011160A
	Transformer, 120/24v, 40VA, BE161640REK0028	550001533	550001533	550001533	550001533	550001533	550001533
	Limit Switch, Therm-O-Disc 36T01B7, 200°F, 42363, 7" Insertion	27067	27067	27067	27067	27067	27067
	Gasket, Limit Switch	26762	26762	26762	26762	26762	26762
	Blower Group						
	Blower Assembly, Complete	N/A	N/A	N/A	N/A	N/A	N/A
16	Blower Housing & Wheel, DC 1020-600-5	N/A	N/A	- - -	- - -	- - -	- - -
	Blower Housing & Wheel, Morrison 100-8 DD, 05-23655	- - -	- - -	30261	30261	- - -	- - -
16	Blower Housing & Wheel, DC 1020-916-5	- - -	- - -	- - -	- - -	N/A	N/A
	Blower Wheel, for 10-6 blower unavailable	- - -	- - -	- - -	- - -	- - -	- - -
	Blower Wheel, CM1020-800, (10 - 8)	- - -	- - -	26610	26610	- - -	- - -
	Blower Wheel, CM1020-916, (10 - 9)	- - -	- - -	- - -	- - -	27326	27326
17	Blower Motor, 1/3 hp, 4-Speed, PSC, AOS OLE1036	550001987	550001987	550001987	550001987	- - -	- - -
17	Blower Motor, 1/2 hp, 4-Speed, PSC, G.E. 5KCP39LGY723BS	- - -	- - -	- - -	- - -	102000131	102000131
	Alt: Blower 1/2 HP Motor Kit W/ Mounting Hardware, No Capacitor	- - -	- - -	- - -	- - -	27836	27836
	Alt: Blower 1/2 HP Motor Kit W/ Capacitor, No Hardware	- - -	- - -	- - -	- - -	550001530	550001530

	HHS(M) Series Mid Efficiency Highboy Gas Furnace						
Ref. No.	**Description**	**HHS-45M**	**HHS-60M**	**HHS-75M**	**HHS-90M**	**HHS-105M**	**HHS-120M**
	Motor Mounting Band, TR5868	17811	17811	17811	17811	17811	17811
	Motor Mounting Arms, TR6884B, (*3 Required*)	26251	26251	26251	26251	26251	26251
18	Capacitor, 5 mfd @ 370 vac, M22P3705M00	27741	27741	27741	27741	- - -	- - -
18	Capacitor, 12.5 mfd @ 370 vac M22P3712N00	27744	27744	27744	27744	- - -	- - -
18	Capacitor, 10 mfd @ 370 vac, M22P3710M00	- - -	- - -	- - -	- - -	27743	27743
	Capacitor Strap	27760	27760	27760	27760	27760	27760
	Capacitor Insulator	27769	27769	27769	27769	27769	27769
19	Blower Rail, (*2 Required*)	18189	18189	- - -	- - -	18189	18189
19	Blower Rail, (*2 Required*)	- - -	- - -	26536	26536	- - -	- - -
	Burner Group						
	Burner Assembly, Natural Gas, Complete	N/A	N/A	N/A	N/A	N/A	N/A
21	Hot Surface Ignitor, Norton 201W, *45 Second Warm-Up*	20834	20834	20834	20834	20834	20834
21	Hot Surface Ignitor, Norton 271W, *17 Second Warm-Up*	26789S	26789S	26789S	26789S	26789S	26789S
22	Ignitor Bracket	N/A	N/A	N/A	N/A	N/A	N/A
28	Flame Roll-Out Switch, 36TR16-6031, 350°F	19292	19292	19292	19292	19292	19292
29	Flame Roll-Out Switch Gasket	N/A	N/A	N/A	N/A	N/A	N/A
30	Manifold Assembly	N/A	N/A	N/A	N/A	N/A	N/A
31	BSI Ribbon Burner Assembly	16725	16725	10741	10741	16726	16726
32	Gas Valve, Natural Gas, VR8205A2008B	26180	26180	26180	26180	26180	26180
32	Gas Valve, L.P. Gas, VR8205A2016B	26181	26181	26181	26181	26181	26181
	Natural Gas Regulator Spring, *Honeywell 394588*	19021	19021	19021	19021	19021	19021
	L.P. Gas Regulator Spring, *Honeywell 393691*	19020	19020	19020	19020	19020	19020
33	Burner Orifice, Natural Gas						
	HHS-45, No. 43 DMS, (*2 Required*)	3051094B	- - -	- - -	- - -	- - -	- - -
	HHS-60, No. 37 DMS, (*2 Required*)	- - -	18879	- - -	- - -	- - -	- - -
	HHS-75, No. 41 DMS, (*3 Required*)	- - -	- - -	10357	- - -	- - -	- - -
	HHS-90, No. 37 DMS, (*3 Required*)	- - -	- - -	- - -	18879	- - -	- - -
	HHS-105, No. 41 DMS, (*4 Required*)	- - -	- - -	- - -	- - -	10357	- - -
	HHS-120, No. 37 DMS, (*4 Required*)	- - -	- - -	- - -	- - -	- - -	18879
33	Burner Orifice, L.P. Gas						
	HHS-45, No. 54 DMS, (*2 Required*)	N/A	- - -	- - -	- - -	- - -	- - -
	HHS-60, No. 52 DMS, (*2 Required*)	- - -	3051110B	- - -	- - -	- - -	- - -
	HHS-75, No. 53 DMS, (*3 Required*)	- - -	- - -	3051111B	- - -	- - -	- - -
	HHS-90, No. 52 DMS, (*3 Required*)	- - -	- - -	- - -	3051110B	- - -	- - -
	HHS-105, No. 53 DMS, (*4 Required*)	- - -	- - -	- - -	- - -	3051111B	- - -
	HHS-120, No. 52 DMS, (*4 Required*)	- - -	- - -	- - -	- - -	- - -	3051110B
34	Flame Sensor, *Honeywell 272789*	26878	26878	26878	26878	26878	26878
35	Flame Sensor Bracket	21757	21757	21757	21757	21757	21757

	HHS(M) Series Mid Efficiency Highboy Gas Furnace						
Ref. No.	**Description**	**HHS-45M**	**HHS-60M**	**HHS-75M**	**HHS-90M**	**HHS-105M**	**HHS-120M**
36	Upper Heat Shield	N/A	N/A	N/A	N/A	N/A	N/A
37	Lower Heat Shield	N/A	N/A	N/A	N/A	N/A	N/A
	Venting Group						
38	Vent Box Assembly	26912	26912	26912	26912	26912	26912
39	Flue Box Cover	N/A	N/A	N/A	N/A	N/A	N/A
40	Gasket, Flue Box	26467	26467	26467	26467	N/A	N/A
41	Gasket, Extension Tube	N/A	N/A	N/A	N/A	N/A	N/A
42	Extension Tube	N/A	N/A	N/A	N/A	N/A	N/A
43	Induced Blower Assembly	26607	26607	26607	26607	26607	26607
44	Gasket, Induced Blower	21873	21873	21873	21873	21873	21873
45	Induced Blower Relay, *SPST, 24v Coil*	27739	27739	27739	27739	27739	27739
46	Chute Orifice						
	HHS-45, 1.00 " I.D.	N/A	- - -	- - -	- - -	- - -	- - -
	HHS-60, 1.12 " I.D.	- - -	N/A	- - -	- - -	- - -	- - -
	HHS-75, 1.23 " I.D.	- - -	- - -	N/A	- - -	- - -	- - -
	HHS-90, 1.40 " I.D.	- - -	- - -	- - -	N/A	- - -	- - -
	HHS-105, 1.50 " I.D.	- - -	- - -	- - -	- - -	N/A	- - -
	HHS-120, 1.60 " I.D.	- - -	- - -	- - -	- - -	- - -	N/A
48	Vent Safety Switch, Therm-O-Disc 205952, 60T24, 200°F	N/A	N/A	N/A	N/A	N/A	N/A
	Miscellaneous Group						
15	Air Filter, 16 x 20 x 1, Semi-Permanent	2180026	2180026	- - -	- - -	- - -	- - -
15	Air Filter, 16 x 25 x 1, Semi-Permanent	- - -	- - -	2180023	2180023	2180023	2180023
	Installation, Operation & Maintenance Manual	N/A	N/A	N/A	N/A	N/A	N/A
	Conversion Kit, Natural Gas to L.P. Gas	N/A	N/A	N/A	N/A	N/A	N/A
	Conversion Kit, L.P. Gas to Natural Gas	N/A	N/A	N/A	N/A	N/A	N/A

HHS(M) Series Mid Efficiency Highboy Gas Furnace

Specifications

Natural Gas and Propane:

Model	Ratings BTU/HR 0-2000'		Main Blower	External Static Pressure Direct Drive			Cooling Capacity			AFUE
	Input	Output		.20 W.C.	.50 W.C.	HP	Tons	HP	MAX CFM	
HHS 45	45,000	37,400	10-6	M.LO	M.HI	1/3	2	1/3	1250	80.5
HHS 60	60,000	49,800	10-6	M.HI	HI	1/3	2-1/2	1/3	1250	80.5
HHS 75	75,000	62,300	10-8	M.HI	M.HI	1/3	3	1/3	1350	80.5
HHS 90	90,000	74,700	10-8	M.HI	HI	1/3	3	1/3	1350	80.5
HHS 105	105,000	87,200	10-9	M.HI	HI	1/2	3 1/2	1/2	1500	80.5
HHS 120	120,00	99,600	10-9	M.HI	HI	1/2	3 1/2	1/2	1500	80.5

Dimensions

Model	Cabinet			Return Plenum (FxG)	Warm Air Plenum (ExD)	Air Filter	Vent Dia.	Clearances					Shipping WT. LBS.
	Width A	Depth B	HT. C					Top	Front	Sides	Back	Vent	
HHS 45-60	17-1/2	28	51	14x18	16x18-1/4	16x20x1	3-4	1	6	1	0	6	195
HHS 75-120	17-1/2	28	51	14x22	16x18-1/4	16x25x1	3-4	1	6	1	0	6	195