WMS-2 Series Mid Efficiency Downflow Gas Furnace

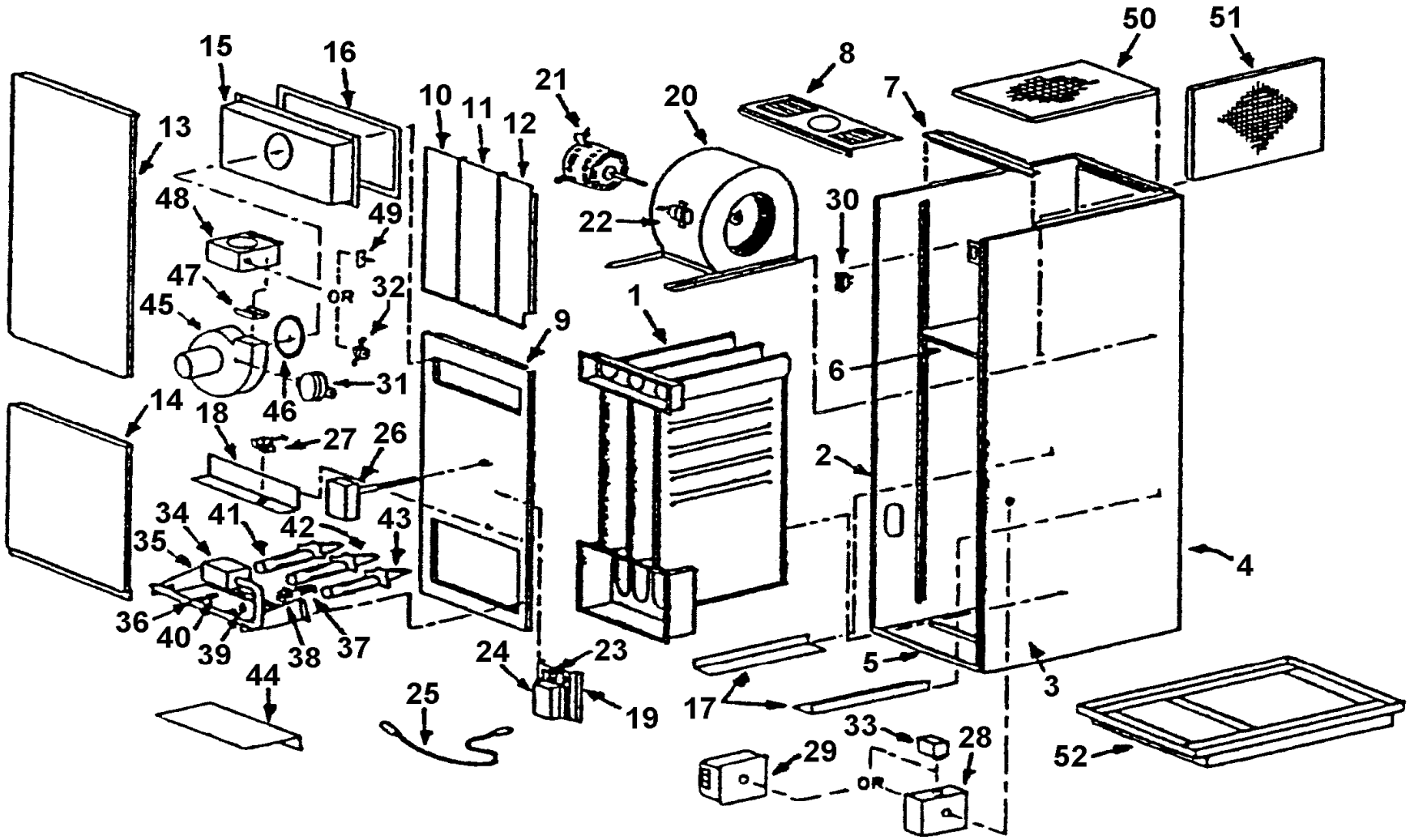

	WMS-2 Series Mid Efficiency Downflow Gas Furnace									
Ref. No.	**Description**	**WMS-2-45**	**WMS-2-60**	**WMS-2-75**	**WMS-2-90**	**WMS-2-90 U.S.**	**WMS-2-105**	**WMS-2-120**	**WMS-2-130B**	**WMS-2-150**
	NOTE: "T" Suffix indicates Sidewall Vented Unit									
	Sheet Metal Group									
1	Heat Exchanger Assembly	N/A	N/A	N/A	N/A	N/A	N/A	N/A	N/A	N/A
2	Left Side Panel Assembly	N/A	N/A	N/A	N/A	N/A	N/A	N/A	N/A	N/A
3	Right Side Panel Assembly	N/A	N/A	N/A	N/A	N/A	N/A	N/A	N/A	N/A
4	Rear Panel Assembly	N/A	N/A	N/A	N/A	N/A	N/A	N/A	N/A	N/A
5	Base Panel	N/A	N/A	N/A	N/A	N/A	N/A	N/A	N/A	N/A
6	Blower Division Panel Assembly	N/A	N/A	N/A	N/A	N/A	N/A	N/A	N/A	N/A
7	Support Channel	N/A	N/A	N/A	N/A	N/A	N/A	N/A	N/A	N/A
8	Top Panel	N/A	N/A	N/A	N/A	N/A	N/A	N/A	N/A	N/A
9	Inner Front Panel	N/A	N/A	N/A	N/A	N/A	N/A	N/A	N/A	N/A
10	Left Blower Access Panel	N/A	N/A	N/A	N/A	N/A	N/A	N/A	N/A	N/A
11	Middle Blower Access Panel	N/A	N/A	N/A	N/A	N/A	N/A	N/A	N/A	N/A
12	Right Blower Access Panel	N/A	N/A	N/A	N/A	N/A	N/A	N/A	N/A	N/A
	Door Hanger Channel	N/A	N/A	N/A	N/A	N/A	N/A	N/A	N/A	N/A
13	Upper Front Door	N/A	N/A	N/A	N/A	N/A	N/A	N/A	N/A	N/A
14	Lower Front Door	N/A	N/A	N/A	N/A	N/A	N/A	N/A	N/A	N/A
15	Flue Collection Box	N/A	N/A	N/A	N/A	N/A	N/A	N/A	N/A	N/A
16	Flue Collection Box Gasket	N/A	N/A	N/A	N/A	N/A	N/A	N/A	N/A	N/A
17	Baffle, Side Panel	N/A	N/A	- - -	- - -	N/A	- - -	- - -	- - -	- - -
18	Flame Shield	N/A	N/A	N/A	N/A	N/A	N/A	N/A	N/A	N/A
	Filter Rack Assembly	N/A	N/A	N/A	N/A	N/A	N/A	N/A	N/A	N/A
19	Control Panel	N/A	N/A	N/A	N/A	N/A	N/A	N/A	N/A	N/A
	Blower Group									
	Blower Assembly, Complete	N/A	N/A	N/A	N/A	N/A	N/A	N/A	N/A	N/A
20	Blower Housing and Wheel, Airdex DC916-416-5	N/A	N/A	- - -	- - -	- - -	- - -	- - -	- - -	- - -
20	Blower Housing and Wheel, Airdex DC916-600-5	- - -	- - -	N/A	N/A	- - -	- - -	- - -	- - -	- - -
20	Blower Housing and Wheel, Airdex DCT1020-916-5	- - -	- - -	- - -	- - -	N/A	N/A	N/A	- - -	- - -
20	Blower Housing and Wheel, Morrison 100-10T DD	- - -	- - -	- - -	- - -	- - -	- - -	- - -	30626	30626
	Blower Wheel, 9-4 Direct Drive	N/A	N/A	- - -	- - -	- - -	- - -	- - -	- - -	- - -
	Blower Wheel, Airdex 916-600	- - -	- - -	26288	26288	- - -	- - -	- - -	- - -	- - -
	Blower Wheel, Airdex CM1020-916 5014941	- - -	- - -	- - -	- - -	27326	27326	27326	- - -	- - -
	Blower Wheel, CM1020-1020	- - -	- - -	- - -	- - -	- - -	- - -	- - -	26430	26430
21	Blower Motor, 1/4 hp, 4-Speed, Direct Drive, AOS Cat. No. 752	30059	30059	30059	30059	- - -	- - -	- - -	- - -	- - -
21	Blower Motor, 1/3 hp, 4-Speed, Direct Drive, AOS OLE1036	- - -	- - -	- - -	- - -	550001987	550001987	550001987	- - -	- - -

	WMS-2 Series Mid Efficiency Downflow Gas Furnace									
Ref. No.	**Description**	**WMS-2-45**	**WMS-2-60**	**WMS-2-75**	**WMS-2-90**	**WMS-2-90 U.S.**	**WMS-2-105**	**WMS-2-120**	**WMS-2-130B**	**WMS-2-150**
	NOTE: "T" Suffix indicates Sidewall Vented Unit									
21	Blower Motor, 1/2 hp, 4-Speed, Direct Drive, GE 5KCP39LGY723BS	- - -	- - -	- - -	- - -	- - -	- - -	- - -	102000131	102000131
	Alt: Blower 1/2 HP Motor Kit W/ Mounting Hardware, No Capacitor	- - -	- - -	- - -	- - -	- - -	- - -	- - -	27836	27836
	Alt: Blower 1/2 HP Motor Kit W/ Capacitor, No Hardware	- - -	- - -	- - -	- - -	- - -	- - -	- - -	550001530	550001530
	Blower Motor Mounting Band	- - -	- - -	- - -	- - -	17811	17811	17811	17811	17811
	Blower Motor Mounting Arm, (*3 Required*)	- - -	- - -	- - -	- - -	26251	26251	26251	26251	26251
22	Capacitor, 5 mfd@370 vac, M22P3705M00	27741	27741	27741	27741	27741	27741	27741	- - -	- - -
22	Capacitor, 10 mfd@370 vac, M22P3710M00	- - -	- - -	- - -	- - -	- - -	- - -	- - -	27743	27743
22	Capacitor, 12.5 mfd@370 vac, M22P3712N00	- - -	- - -	- - -	- - -	27744	27744	27744	- - -	- - -
	Capacitor Insulator, 44603-0009	27769	27769	27769	27769	27769	27769	27769	27769	27769
	Capacitor Strap, 51045-0013	27760	27760	27760	27760	27760	27760	27760	27760	27760
	Blower Side Angle, (*2 Required*)	N/A	N/A	N/A	N/A	N/A	N/A	N/A	N/A	N/A
	Electrical & Controls Group									
23	Relay, Induced Blower, SPST, 24v Coil, 9400-11Q	27739	27739	27739	27739	27739	27739	27739	27739	27739
24	Intermittent Spark Ignition Control, Honeywell S8600H3002B	21452	21452	21452	21452	21452	21452	21452	21452	21452
25	Electrode Cable, Honeywell 392286-1, *Raj x Raj*	18893	18893	18893	18893	18893	18893	18893	18893	18893
25	Electrode Cable, Honeywell 394801-20, *Raj x 1/4" Quick-Connect*	21455	21455	21455	21455	21455	21455	21455	21455	21455
24	Hot Surface Ignition Control, W-R 50E47-843	20837	20837	20837	20837	20837	20837	20837	20837	20837
	Auxiliary Limit Switch, Therm-O-Disc 60T21 L150 202885	N/A	N/A	N/A	N/A	N/A	N/A	N/A	N/A	N/A
26	Fan / Limit Control, 11½" Insertion, 140°F, L4064B or L6064A	- - -	- - -	- - -	- - -	- - -	N/A	N/A	- - -	- - -
26	Fan / Limit Control, 11½" Insertion, 155°F, L4064B or L6064A	- - -	- - -	- - -	- - -	- - -	- - -	- - -	N/A	N/A
26	Fan / Limit Control, 11½" Insertion, 160°F, L4064B or L6064A	- - -	- - -	N/A	N/A	N/A	- - -	- - -	- - -	- - -
26	Fan / Limit Control, 11½" Insertion, 170°F, L4064B or L6064A	12354	12354	- - -	- - -	- - -	- - -	- - -	- - -	- - -
27	Flame Roll-Out Switch, 350°F, Therm-O-Disc 36TR16-6031	19292	19292	19292	19292	19292	19292	19292	19292	19292
	Gasket, Flame Roll-Out Switch	N/A	N/A	N/A	N/A	N/A	N/A	N/A	N/A	N/A
28	Junction Box	21318	21318	21318	21318	21318	21318	21318	21318	21318
29	Fan Center, Tyco 1-1611760-0-57-01 V18BC4E231	27740	27740	27740	27740	27740	27740	27740	27740	27740
	Fan Center Replacement Relay, SPDT, Tyco 9400-04Q1999	27767	27767	27767	27767	27767	27767	27767	27767	27767
30	Door Switch, A22B TLB-B	19172	19172	19172	19172	19172	19172	19172	19172	19172
	Bracket, Door Switch	18932	18932	18932	18932	18932	18932	18932	18932	18932
31	Pressure Switch, + 0.20" w.c., FS6116-659	20649	20649	20649	20649	20649	20649	20649	20649	20649
31	Pressure Switch, + 0.25" w.c., FS6116-764, *see notes*	20829	20829	20829	20829	20829	20829	20829	- - -	- - -
31	Pressure Switch, + 0.28" w.c., FS6116-636	- - -	- - -	- - -	- - -	- - -	- - -	- - -	N/A	N/A
31	Pressure Switch, + 0.35" w.c., FS6116-498	17990	17990	17990	17990	17990	17990	17990	- - -	- - -
31	Pressure Switch, - 0.55" w.c., 9300-v, N/O, *see notes*	28308	28308	28308	28308	28308	28308	28308	- - -	- - -

	WMS-2 Series Mid Efficiency Downflow Gas Furnace									
Ref. No.	**Description**	**WMS-2-45**	**WMS-2-60**	**WMS-2-75**	**WMS-2-90**	**WMS-2-90 U.S.**	**WMS-2-105**	**WMS-2-120**	**WMS-2-130B**	**WMS-2-150**
	NOTE: "T" Suffix indicates Sidewall Vented Unit									
32	Vent Limit Switch, 200°F, Therm-O-Disc 60T24L200, 205952, *see notes*	N/A	N/A	- - -	- - -	- - -	- - -	- - -	- - -	- - -
32	Vent Limit Switch, 250°F, Therm-O-Disc 60T25L250, 330733, *see notes*	- - -	- - -	11060	11060	11060	11060	11060	11060	11060
	Fan Relay, SPDT, 24V Coil, 9400-04Q1999	27767	27767	27767	27767	27767	27767	27767	27767	27767
33	Transformer, 120 / 24 v, 40 VA, BE161640REK0028	550001533	550001533	550001533	550001533	550001533	550001533	550001533	550001533	550001533
	Burner Group									
	Inshot Burners, Intermittent Spark, Nat. Gas Only									
34	Gas Valve, Honeywell VR8204A2175/B	14662052	14662052	14662052	14662052	14662052	14662052	14662052	- - -	14662052
35	Manifold Assembly	N/A	N/A	N/A	N/A	N/A	N/A	N/A	- - -	N/A
36	Burner Orifice, NG, No. 38 DMS	- - -	3051100B (2)	- - -	3051100B (3)	3051100B (3)	- - -	3051100B (4)	- - -	3051100B (5)
36	Burner Orifice, NG, No. 40 DMS	- - -	- - -	- - -	- - -	- - -	3051097B (4)	- - -	- - -	- - -
36	Burner Orifice, NG, No. 41 DMS	- - -	- - -	10357 (3)	- - -	- - -	- - -	- - -	- - -	- - -
36	Burner Orifice, NG, No. 43 DMS	3051094B (2)	- - -	- - -	- - -	- - -	- - -	- - -	- - -	- - -
37	Pilot Burner Assembly, Honeywell Q345A1024B	1380004	1380004	1380004	1380004	1380004	1380004	1380004	- - -	1380004
	Pilot Orifice, NG, BCR-18, Honeywell H390686-4	21407	21407	21407	21407	21407	21407	21407	- - -	21407
38	Pilot Bracket	15179	15179	15179	15179	15179	15179	15179	- - -	15179
	Pilot Tubing, 23", 0.25" O.D. x 0.032 Aluminium	1140146	1140146	1140146	1140146	1140146	1140146	1140146	- - -	1140146
39	Air Shutter	N/A (4)	N/A (4)	N/A (6)	N/A (6)	N/A (6)	N/A (8)	N/A (8)	- - -	N/A (10)
40	Air Shutter Spring	2160078 (2)	2160078 (2)	2160078 (3)	2160078 (3)	2160078 (3)	2160078 (4)	2160078 (4)	- - -	2160078 (5)
41	Inshot Burner, Left	- - -	- - -	N/A	N/A	N/A	N/A	N/A	- - -	N/A
42	Inshot Burner, Center	N/A (2)	N/A (2)	N/A	N/A	N/A	N/A (2)	N/A (2)	- - -	N/A (3)
43	Inshot Burner, Right	- - -	- - -	N/A	N/A	N/A	N/A	N/A	- - -	N/A
18	Flame Shield	N/A	N/A	N/A	N/A	N/A	N/A	N/A	- - -	N/A
44	Burner Bottom Screen	N/A	N/A	N/A	N/A	N/A	N/A	N/A	- - -	N/A
	BSI Ribbon Burners, Intermittent Spark, NG or LP Gas									
34	Gas Valve, NG, Honeywell VR8204A2175/B	14662052	14662052	14662052	14662052	14662052	14662052	14662052	- - -	14662052
34	Gas Valve, LP, Honeywell VR8204A2043B	18603	- - -	18603	- - -	- - -	18603	- - -	18603	- - -
35	Manifold Assembly	N/A	N/A	N/A	N/A	N/A	N/A	N/A	N/A	N/A
36	Burner Orifice, NG, No. 38 DMS	- - -	3051100B (2)	- - -	3051100B (3)	3051100B (3)	- - -	3051100B (4)	- - -	3051100B (5)
36	Burner Orifice, NG, No. 40 DMS	- - -	- - -	- - -	- - -	- - -	3051097B (4)	- - -	- - -	- - -
36	Burner Orifice, NG, No. 41 DMS	- - -	- - -	10357 (3)	- - -	- - -	- - -	- - -	- - -	- - -
36	Burner Orifice, NG, No. 43 DMS	3051094B (2)	- - -	- - -	- - -	- - -	- - -	- - -	- - -	- - -
36	Burner Orifice, LP, No. 53 DMS	- - -	- - -	3051111B (3)	- - -	- - -	3051111B (4)	- - -	3051111B (5)	- - -
36	Burner Orifice, LP, No. 55 DMS	N/A (2)	- - -	- - -	- - -	- - -	- - -	- - -	- - -	- - -

	WMS-2 Series Mid Efficiency Downflow Gas Furnace									
Ref. No.	**Description**	**WMS-2-45**	**WMS-2-60**	**WMS-2-75**	**WMS-2-90**	**WMS-2-90 U.S.**	**WMS-2-105**	**WMS-2-120**	**WMS-2-130B**	**WMS-2-150**
	NOTE: "T" Suffix indicates Sidewall Vented Unit									
37	Pilot Burner Assembly, Honeywell Q345A1024B	1380004	1380004	1380004	1380004	1380004	1380004	1380004	1380004	1380004
	Pilot Orifice, NG, BCR-18, Honeywell H390686-4	21407	21407	21407	21407	21407	21407	21407	- - -	21407
	Pilot Orifice, LP, BBR-12, Honeywell 390686-25	2012100A	- - -	2012100A	- - -	- - -	2012100A	- - -	2012100A	- - -
38	Pilot Bracket	10028	10028	10028	10028	10028	10028	10028	10028	10028
	Pilot Tubing, 23", 0.25" O.D. x 0.032 Aluminium	1140146	1140146	1140146	1140146	1140146	1140146	1140146	1140146	1140146
	BSI Ribbon Burner Assembly	16725	16725	10741	10741	10741	16726	16726	16727	16727
18	Flame Shield	N/A	N/A	N/A	N/A	N/A	N/A	N/A	N/A	N/A
44	Burner Bottom Shield	N/A	N/A	N/A	N/A	N/A	N/A	N/A	N/A	N/A
	BSI Ribbon Burners, HSI, NG or LP Gas, mfg after 4/16/1991									
34	Gas Valve, Natural Gas, Honeywell VR8205A2008B	26180	26180	26180	26180	26180	26180	26180	- - -	26180
34	Gas Valve, L.P. Gas, Honeywell VR8205A2016B	26181	- - -	26181	- - -	- - -	26181	- - -	26181	- - -
35	Manifold Assembly	N/A	N/A	N/A	N/A	N/A	N/A	N/A	N/A	N/A
36	Burner Orifice, NG, No. 38 DMS	- - -	3051100B (2)	- - -	3051100B (3)	3051100B (3)	- - -	3051100B (4)	- - -	3051100B (5)
36	Burner Orifice, NG, No. 40 DMS	- - -	- - -	- - -	- - -	- - -	3051097B (4)	- - -	- - -	- - -
36	Burner Orifice, NG, No. 41 DMS	- - -	- - -	10357 (3)	- - -	- - -	- - -	- - -	- - -	- - -
36	Burner Orifice, NG, No. 43 DMS	3051094B (2)	- - -	- - -	- - -	- - -	- - -	- - -	- - -	- - -
36	Burner Orifice, LP, No. 53 DMS	- - -	- - -	3051111B (3)	- - -	- - -	3051111B (4)	- - -	3051111B (5)	- - -
36	Burner Orifice, LP, No. 55 DMS	N/A (2)	- - -	- - -	- - -	- - -	- - -	- - -	- - -	- - -
	Hot Surface Ignitor, Norton 201W, 45 Second	20834	20834	20834	20834	20834	20834	20834	20834	20834
	Bracket, Hot Surface Ignitor	N/A	N/A	N/A	N/A	N/A	N/A	N/A	N/A	N/A
	Flame Sensor, Straight, Honeywell 272789	26878	26878	26878	26878	26878	26878	26878	26878	26878
	Bracket, Flame Sensor, (*included with flame sensor*)	21757	21757	21757	21757	21757	21757	21757	21757	21757
	Flame Sensor, White-Rodgers 3107-60-401	N/A	N/A	N/A	N/A	N/A	N/A	N/A	N/A	N/A
	BSI Ribbon Burner Assembly	16725	16725	10741	10741	10741	16726	16726	16727	16727
18	Flame Shield	N/A	N/A	N/A	N/A	N/A	N/A	N/A	N/A	N/A
44	Burner Bottom Shield	N/A	N/A	N/A	N/A	N/A	N/A	N/A	N/A	N/A
	Venting Group									
45	Induced Blower Assy Replacement Kit, Chimney Vent Models	26986	26986	26986	26986	26986	26986	26986	26171	26171
	Induced Blower Assy Replacement Kit, Sidewall Vent Models (T)	26171	26171	26171	26171	26171	26171	26171	26171	26171
46	Induced Blower Gasket	21873	21873	21873	21873	21873	21873	21873	21873	21873
47	Flue Orifice, 7/8"	N/A	- - -	- - -	- - -	- - -	- - -	- - -	- - -	- - -
47	Flue Orifice, 1-1/16"	- - -	N/A	- - -	- - -	- - -	- - -	- - -	- - -	- - -
47	Flue Orifice, 1-1/8"	- - -	N/A	- - -	- - -	- - -	- - -	- - -	- - -	- - -

	WMS-2 Series Mid Efficiency Downflow Gas Furnace									
Ref. No.	**Description**	**WMS-2-45**	**WMS-2-60**	**WMS-2-75**	**WMS-2-90**	**WMS-2-90 U.S.**	**WMS-2-105**	**WMS-2-120**	**WMS-2-130B**	**WMS-2-150**
	NOTE: "T" Suffix indicates Sidewall Vented Unit									
47	Flue Orifice, 1-3/16"	- - -	- - -	N/A	- - -	- - -	- - -	- - -	- - -	- - -
47	Flue Orifice, 1-5/16"	- - -	- - -	N/A	- - -	- - -	- - -	- - -	- - -	- - -
47	Flue Orifice, 1-3/8"	- - -	- - -	- - -	N/A	N/A	N/A	- - -	- - -	- - -
47	Flue Orifice, 1-9/16"	- - -	- - -	- - -	- - -	- - -	- - -	N/A	- - -	- - -
47	Flue Orifice, 1-1/2"	- - -	- - -	- - -	- - -	- - -	N/A	- - -	- - -	- - -
47	Flue Orifice, 1-5/8"	- - -	- - -	- - -	- - -	- - -	- - -	- - -	N/A	- - -
47	Flue Orifice, 1-13/16"	- - -	- - -	- - -	- - -	- - -	- - -	- - -	N/A	N/A
15	Flue Collection Box	N/A	N/A	N/A	N/A	N/A	N/A	N/A	N/A	N/A
16	Flue Collection Box Gasket	N/A	N/A	N/A	N/A	N/A	N/A	N/A	N/A	N/A
48	Vent Box Assembly	N/A	N/A	N/A	N/A	N/A	N/A	N/A	N/A	N/A
32	Vent Limit Switch, 200°F, Therm-O-Disc 60T24L200, 205952	N/A	N/A	- - -	- - -	- - -	- - -	- - -	- - -	- - -
32	Vent Limit Switch, 250°F, Therm-O-Disc 60T25L250, 330733	- - -	- - -	11060	11060	11060	11060	11060	11060	11060
49	Offset Bracket - *Sidewall vented models only*	N/A	N/A	N/A	N/A	N/A	N/A	N/A	N/A	N/A
	Hose Barb, - *Sidewall vented models only*	N/A	N/A	N/A	N/A	N/A	N/A	N/A	N/A	N/A
	Gasket, O-Ring, 0.112 x 0.103, *used with above hose barb*	N/A	N/A	N/A	N/A	N/A	N/A	N/A	N/A	N/A
	Nut, Brass, Hex, No. 10-32, *used with above hose barb*	2131020A	2131020A	2131020A	2131020A	2131020A	2131020A	2131020A	2131020A	2131020A
31	Pressure Switch, + 0.20" w.c., FS6116-659	20649	20649	20649	20649	20649	20649	20649	20649	20649
31	Pressure Switch, + 0.25" w.c., FS6116-764	20829	20829	20829	20829	20829	20829	20829	- - -	- - -
31	Pressure Switch, + 0.28" w.c., FS6116-636	- - -	- - -	- - -	- - -	- - -	- - -	- - -	N/A	N/A
31	Pressure Switch, + 0.35" w.c., FS6116-498	17990	17990	17990	17990	17990	17990	17990	- - -	- - -
31	Pressure Switch, - 0.55" w.c., 9300-v, N/O	28308	28308	28308	28308	28308	28308	28308	- - -	- - -
	Silicon Tubing, 3¾-inch, (to IBA), SR200, 1/8" ID, Clear	11344	11344	11344	11344	11344	11344	11344	11344	11344
	Silicone Tubing, 10", (*to Vent Box*), SR200 1/8" I.D., Clear	11344	11344	11344	11344	11344	11344	11344	11344	11344
	Miscellaneous Group									
50	Air Filter, Disposable, 10 x 16 x 1	N/A	N/A	N/A	N/A	- - -	- - -	- - -	- - -	- - -
50	Air Filter, Disposable, 14 x 16 x 1	- - -	- - -	- - -	- - -	N/A	N/A	N/A	- - -	- - -
50	Air Filter, Disposable, 16 x 18 x 1	- - -	- - -	- - -	- - -	- - -	- - -	- - -	N/A	N/A
51	Air Filter, Disposable, 15 x 20 x 1	N/A	N/A	N/A	N/A	N/A	N/A	N/A	N/A	N/A
	Filter Rack Top	N/A	N/A	N/A	N/A	N/A	N/A	N/A	N/A	N/A
	Installation, Operation & Maintenance Manual	N/A	N/A	N/A	N/A	N/A	N/A	N/A	N/A	N/A
	Users Manual	N/A	N/A	N/A	N/A	N/A	N/A	N/A	N/A	N/A
	Instructions for HVT 400 Venting	N/A	N/A	N/A	N/A	N/A	N/A	N/A	N/A	N/A
	Horizontal Vent Termination for "T" Models.	N/A	N/A	N/A	N/A	N/A	N/A	N/A	N/A	N/A
52	Sub-Base Assembly	N/A	N/A	N/A	N/A	N/A	N/A	N/A	N/A	N/A

	WMS-2 Series Mid Efficiency Downflow Gas Furnace									
Ref. No.	**Description**	**WMS-2-45**	**WMS-2-60**	**WMS-2-75**	**WMS-2-90**	**WMS-2-90 U.S.**	**WMS-2-105**	**WMS-2-120**	**WMS-2-130B**	**WMS-2-150**
	NOTE: "T" Suffix indicates Sidewall Vented Unit									
	P/N 26986 Induced Blower Replacement Kit Contents:									
	16-inches, Tube, Silicone, SR200, 1/8" I.D., Clear									
	4 Screws, No. 10 x 3/4, Hex-head / slot with shoulder.									
	2 Combustion Blower Gasket									
	1 Wire, 24", 16 Gauge AWG, 1 St 1/4" QC with Heat Shrink, 1 bare end									
	1 Induced Blower, JA1M209N									
	1 Back Plate with 1.5" I.D. Orifice									
	1 Pressure Switch, - 0.55" w.c., 9300-V N/O									
	1 Hose Barb, Brass, 48P122-7, 0.38" Insertion									
	1 Speed-Nut, No. 2102									
	1 Installation Instructions for Kit No. 26986									

HMS-2 Series Mid Efficiency Highboy Gas Furnace - Challenger / UltraSave / Turbo 830(

Specifications

Natural Gas and Propane:

Model	Ratings BTU/HR		Main Blower	External Static Pressure				CFM @ 85 Rise	Cooling Capacity			A.F.U.E.
				.20 W.C.		.50 W.C.			E.S.P. .50 W.C.			
	Input	Output		Speed	Motor	Speed	Motor		Tons	H.P.	CFM Range	
WMS-2-45	45,000	37,400	D9-4	LOW	1/4	HIGH	1/4	400	1½	1/4	400 - 600	81.5
WMS-2-60	60,000	48,600	D9-4	MED	1/4	HIGH	1/4	530	1½	1/4	400 - 600	81.3
WMS-2-75	75,000	61,500	D9-6	LOW	1/4	HIGH	1/4	650	2 - 2½	1/4	600 - 1000	81.5
WMS-2-90	90,000	73,800	D9-9	LOW	1/3	HIGH	1/3	870	2 - 3	1/3	800 - 1200	81.2
WMS-2-105	105,000	87,150	D9-9	LOW	1/3	HIGH	1/3	870	2 - 3	1/3	800 - 1200	81.3
WMS-2-120	120,000	91,000	D9-9	MED	1/3	HIGH	1/3	1120	2 - 3	1/3	800 - 1200	80.0
WMS-2-150	150,000	118,500	D10-10T	MED	1/2	HIGH	1/2	1320	3 - 4	1/2	1000 - 1600	80.0
WMS-2-130B (LP only)	130,000	105,300	D10-10T	LOW	1/2	HIGH	1/2	1120	3 - 4	1/2	1000 - 1600	N/L

All Models approved for 0' to 4500'
Canada: Propane Models: 45, 75, 105, 130B
United States: Propane Models: 45, 75, 105, 150

Dimensions

Model	Cabinet			Return Plenum (SW x SD)	Warm Air Plenum (RH x RD)	Flue Dia.	Filters (Permanent)	Shipping WT. LBS.
	Width A	Depth B	HT. C					
WMS-2-45	13½	28	51	10 x 16	12 x 18¼	4	10 x 16 x 1 x 20 x 1 15	155
WMS-2-60	13½	28	51	10 x 16	12 x 18¼	4		155
WMS-2-75	13½	28	51	10 x 16	12 x 18¼	4		165
WMS-2-90	13½	28	51	10 x 16	12 x 18¼	4		165
WMS-2-90 U.S.	17½	28	51	14 x 16	16 x 18¼	4	14 x 16 x 1 x 20 x 1 15	175
WMS-2-105	17½	28	51	14 x 16	16 x 18¼	4		195
WMS-2-120	17½	28	51	14 x 16	16 x 18¼	4		195
WMS-2-150	21½	28	51	18 x 16	20 x 18¼	4	18 x 16 x 1 x 20 x 1 15	225
WMS-2-130B	21½	28	51	18 x 16	20 x 18¼	4		225

Clearance to Combustibles: Sides 1, Rear 0, Front 6, Top 1, Flue Pipe 6, Floor Combustible. Approved for Closet Installation.