BMS-2 Series Mid Efficiency Lowboy Gas Furnace

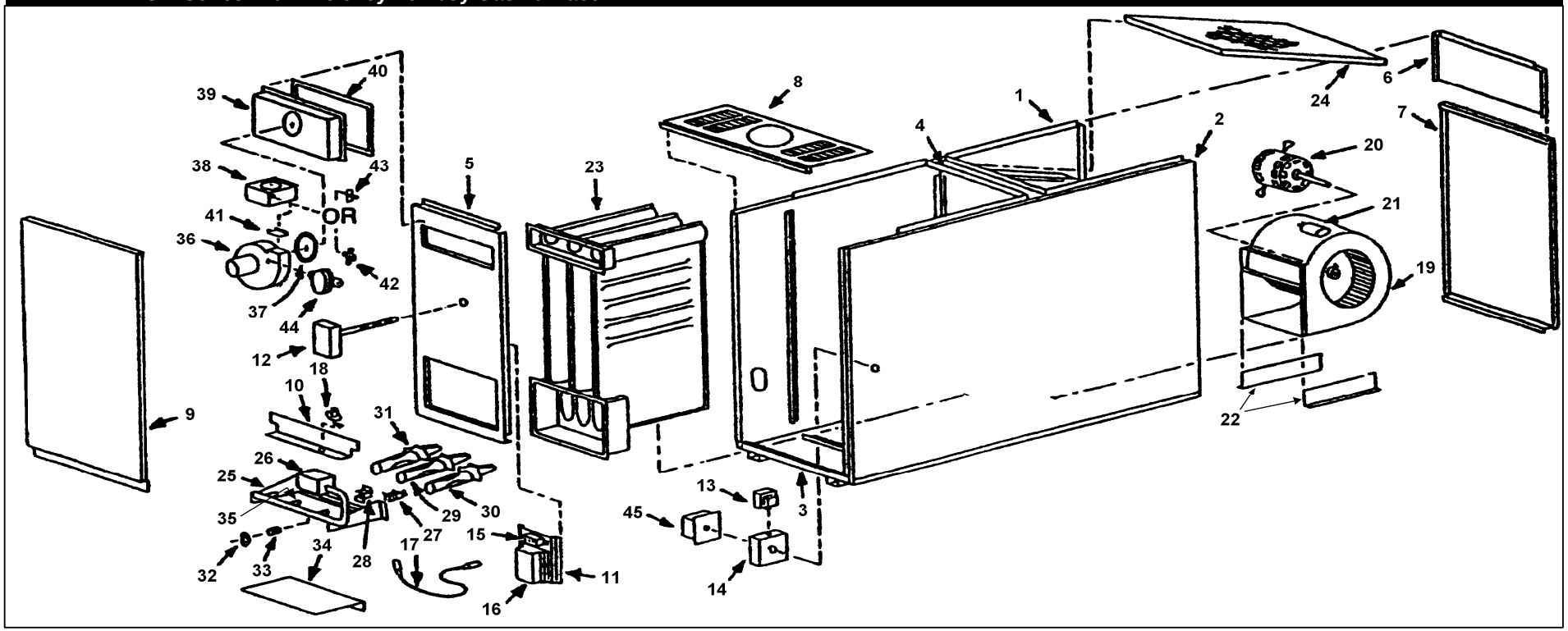

	BMS-2 Series Mid Efficiency Lowboy Gas Furnace - Challenger / UltraSave / Turbo 8300							
Ref. No.	**Description**	**BMS-2-75**	**BMS-2-100/90**	**BMS-2-105**	**BMS-2-120**	**BMS-2-130/120**	**BMS-2-130B**	**BMS-2-150**
	NOTE: "T" Suffix indicates Sidewall Vented Unit							
	Sheet Metal Group							
1	Side Panel, Left Side	N/A	N/A	N/A	N/A	N/A	N/A	N/A
2	Side Panel, Right Side	N/A	N/A	N/A	N/A	N/A	N/A	N/A
3	Base Panel	N/A	N/A	N/A	N/A	N/A	N/A	N/A
4	Blower Division Panel	N/A	N/A	N/A	N/A	N/A	N/A	N/A
5	Inner Front Panel	N/A	N/A	N/A	N/A	N/A	N/A	N/A
6	Upper Rear Panel	N/A	N/A	N/A	N/A	N/A	N/A	N/A
7	Blower Access Panel	N/A	N/A	N/A	N/A	N/A	N/A	N/A
8	Top Panel	N/A	N/A	N/A	N/A	N/A	N/A	N/A
	Front Door Hanger (Channel)	N/A	N/A	N/A	N/A	N/A	N/A	N/A
9	Front Door Panel	N/A	N/A	N/A	N/A	N/A	N/A	N/A
10	Flame Shield	N/A	N/A	N/A	N/A	N/A	N/A	N/A
11	Control Panel	18983	18983	18983	18983	18983	18983	18983
23	Heat Exchanger Assembly	N/A	N/A	N/A	N/A	N/A	N/A	N/A
	Backing Plate	N/A	N/A	N/A	N/A	N/A	N/A	N/A
	Air Filter Retainer	N/A	N/A	N/A	N/A	N/A	N/A	N/A
	Electrical & Controls Group							
12	Fan Limit Control, L6064A, 11½", Limit set to 170°F	12354	12354	- - -	- - -	- - -	12354	12354
12	Fan Limit Control, L6064A, 11½", Limit set to 190°F	- - -	- - -	12356	12356	12356	- - -	- - -
13	Transformer, 40 VA, 161640REK0028	550001533	550001533	550001533	550001533	550001533	550001533	550001533
14	Junction Box	21318	21318	21318	21318	21318	21318	21318
	Junction Box Cover	3011160A	3011160A	3011160A	3011160A	3011160A	3011160A	3011160A
15	Induced Blower Relay, SPST, Tyco 9400-11Q	27739	27739	27739	27739	27739	27739	27739
16	Intermittent Spark Ignition Control, Honeywell S8600H3002B	21452	21452	21452	21452	21452	21452	21452
17	Electrode Cable, Honeywell 394801-20	21455	21455	21455	21455	21455	21455	21455
	Hot Surface Ignition Control, White-Rodgers 50E47-843	- - -	20837	- - -	- - -	- - -	- - -	- - -
	Ignitor, Hot Surface Ignition System, Norton 201W	- - -	20834	- - -	- - -	- - -	- - -	- - -
	Flame Sensor, Honeywell 272789	- - -	26878	- - -	- - -	- - -	- - -	- - -
18	Flame Roll-Out Switch, 350°F, 36TR16-6031	19292	19292	19292	19292	19292	19292	19292
	Gasket, Flame Roll-Out Switch	N/A	N/A	N/A	N/A	N/A	N/A	N/A
	Door Switch, A22B TLB-B	19172	19172	- - -	- - -	- - -	- - -	- - -
	Door Switch Bracket	N/A	N/A	- - -	- - -	- - -	- - -	- - -
42	Vent Safety Switch, 250°F, 60T25, 330733	11060	11060	11060	11060	11060	11060	11060
44	Pressure Switch, +0.35" w.c., FS6116-3087	17990	17990	17990	17990	17990	- - -	- - -
44	Pressure Switch, +0.25" w.c., FS6116-764	20829	20829	20829	20829	20829	- - -	- - -
44	Pressure Switch, +0.20" w.c., X08153	20649	20649	20649	20649	20649	20649	20649
44	Pressure Switch, +0.28" w.c., FS6116-636	- - -	- - -	- - -	- - -	- - -	N/A	N/A
44	Pressure Switch, *from* 26986 Induced Blower Replacement Kit	28308	28308	28308	28308	- - -	- - -	- - -
45	Fan Center, Tyco 1-1611760-0-57-01, V18BC4E231	27740	27740	27740	27740	27740	27740	27740
	Blower Group							

	BMS-2 Series Mid Efficiency Lowboy Gas Furnace - Challenger / UltraSave / Turbo 8300							
Ref. No.	**Description**	**BMS-2-75**	**BMS-2-100/90**	**BMS-2-105**	**BMS-2-120**	**BMS-2-130/120**	**BMS-2-130B**	**BMS-2-150**
	NOTE: "T" Suffix indicates Sidewall Vented Unit							
	Blower Assembly, Complete	N/A	N/A	N/A	N/A	N/A	N/A	N/A
19	Blower Housing & Wheel, Airdex DC916-600-5	N/A	N/A	- - -	- - -	- - -	- - -	- - -
19	Blower Housing & Wheel, Airdex DCT1020-916-5	- - -	- - -	N/A	N/A	N/A	- - -	- - -
19	Blower Housing & Wheel, Morrison 100-10T DD	- - -	- - -	- - -	- - -	- - -	30626	30626
	Blower Wheel, DD, CM916-600, 5014731	26288	26288	- - -	- - -	- - -	- - -	- - -
	Blower Wheel, DD, CM1020-916, 5014941	- - -	- - -	27326	27326	27326	- - -	- - -
	Blower Wheel, DD, CM1020-1020	- - -	- - -	- - -	- - -	- - -	26430	26430
20	Blower Motor, 1/4 hp, 4-Speed, A.O.S. Cat. 752	30059	30059	-	-	-	- - -	- - -
20	Blower Motor, 1/3 hp, 4-Speed, A.O.S. OLE1036	- - -	- - -	550001987	550001987	550001987	- - -	- - -
20	Blower Motor, 1/2 hp, 4-Speed, G.E. 5KCP39LGY723BS	- - -	- - -	- - -	- - -	- - -	102000131	102000131
	Alt: Blower 1/2 HP Motor Kit W/ Mounting Hardware, No Capacitor	- - -	- - -	- - -	- - -	- - -	27836	27836
	Alt: Blower 1/2 HP Motor Kit W/ Capacitor, No Hardware	- - -	- - -	- - -	- - -	- - -	550001530	550001530
	Motor Mounting Band	- - -	- - -	17811	17811	17811	17811	17811
	Motor Mounting Arms (3 Required)	- - -	- - -	26251	26251	26251	26251	26251
21	Capacitor, 5 mfd @ 370 vac Aerovox M22P3705M00	27741	27741	27741	27741	27741	- - -	- - -
21	Capacitor, 12.5 mfd @ 370 vac Aerovox M22P3712N00	- - -	- - -	- - -	- - -	- - -	- - -	- - -
21	Capacitor, 10 mfd @ 370 vac Aerovox M22P3710M00	- - -	- - -	- - -	- - -	- - -	27743	27743
	Capacitor Insulator, 44603-0009	27769	27769	27769	27769	27769	27769	27769
	Capacitor Strap, N-24B, 51045-0013	27760	27760	27760	27760	27760	27760	27760
	Blower Leg (*2 Required*)	N/A	N/A	N/A	N/A	N/A	N/A	N/A
	Grommet, Blower Feet, 8860014, (*4 Required*)	26415	26415	26415	26415	26415	26415	26415
	Burner Group *Natural Gas Only*							
25	Burner Manifold Assembly	N/A	N/A	N/A	- - -	N/A	- - -	N/A
26	Gas Valve, Natural Gas, VR8204A2175/B	14662052	14662052	14662052	- - -	14662052	- - -	14662052
27	Pilot Burner Assembly, Honeywell Q345A2024B	1380004	1380004	1380004	- - -	1380004	- - -	1380004
28	Pilot Bracket	15179	15179	15179	- - -	15179	- - -	15179
29	Inshot Burner, Middle	N/A	N/A	N/A (2)	- - -	N/A (2)	- - -	N/A (3)
30	Inshot Burner, Right	N/A	N/A	N/A	- - -	N/A	- - -	N/A
31	Inshot Burner, Left	N/A	N/A	N/A	- - -	N/A	- - -	N/A
32	Burner Air Shutter	N/A (6)	N/A (6)	N/A (8)	- - -	N/A (8)	- - -	N/A (10)
33	Air Shutter Spring	2160078 (3)	2160078 (3)	2160078 (4)	- - -	2160078 (4)	- - -	2160078 (5)
34	Bottom Manifold Shield	N/A	N/A	N/A	- - -	N/A	- - -	N/A
35	Burner Orifice, Natural Gas, No. 38 DMS	- - -	3051100B (3)	- - -	- - -	3051100B (4)	- - -	3051100B (5)
35	Burner Orifice, Natural Gas, No. 40 DMS	- - -	- - -	3051097B (8)	- - -	- - -	- - -	- - -
35	Burner Orifice, Natural Gas, No. 41 DMS	10357 (3)	- - -	- - -	- - -	- - -	- - -	- - -
	Pilot Tubing, 1/4" O.D. Aluminium Tubing	3051125A	3051125A	3051125A	- - -	3051125A	- - -	3051125A
	Burner Group *Natural or L.P. Gas*							
25	Burner Manifold Assembly	N/A	N/A	N/A	N/A	N/A	N/A	N/A
26	Gas Valve, Natural Gas, VR8204A2175/B	14662052	14662052	14662052	14662052	14662052	14662052	14662052
26	Gas Valve, L.P. Gas, VR8204A2043B	18603	- - -	18603	18603	- - -	18603	- - -

	BMS-2 Series Mid Efficiency Lowboy Gas Furnace - Challenger / UltraSave / Turbo 8300							
Ref. No.	**Description**	**BMS-2-75**	**BMS-2-100/90**	**BMS-2-105**	**BMS-2-120**	**BMS-2-130/120**	**BMS-2-130B**	**BMS-2-150**
	NOTE: "T" Suffix indicates Sidewall Vented Unit							
27	Pilot Burner Assembly, Honeywell Q345A2024B	1380004	1380004	1380004	1380004	1380004	1380004	1380004
	Pilot Orifice, L.P. Gas, BBR-12, Honeywell 390686-25	2012100A	- - -	2012100A	2012100A	- - -	2012100A	- - -
28	Pilot Bracket	10028	10028	10028	10028	10028	10028	10028
	BSI Ribbon Burner Assembly	10741	10741	16726	16726	16726	16727	16727
34	Bottom Manifold Shield	N/A	N/A	N/A	N/A	N/A	N/A	N/A
35	Burner Orifice, Natural Gas, No. 38 DMS	- - -	3051100B (3)	- - -	- - -	3051100B (4)	- - -	3051100B (5)
35	Burner Orifice, Natural Gas, No. 40 DMS	- - -	- - -	3051097B (8)	- - -	- - -	- - -	- - -
35	Burner Orifice, Natural Gas, No. 41 DMS	10357 (3)	- - -	- - -	- - -	- - -	- - -	- - -
35	Burner Orifice, L.P. Gas, No. 52 DMS	- - -	- - -	- - -	3051110B (4)	- - -	- - -	- - -
35	Burner Orifice, L.P. Gas, No. 53 DMS	3051111B (3)	- - -	3051111B (4)	- - -	- - -	3051111B (5)	- - -
	Pilot Tubing, 1/4" O.D. Aluminium Tubing	3051125A	3051125A	3051125A	3051125A	3051125A	3051125A	3051125A
	Burner Group HSI *Natural Gas*							
	L.P. Gas Ribbon Burner Assembly, Complete	- - -	N/A	- - -	- - -	- - -	- - -	- - -
25	Burner Manifold Assembly	- - -	N/A	- - -	- - -	- - -	- - -	- - -
26	Gas Valve, Natural Gas, HSI, VR8205A2008B	- - -	26180	- - -	- - -	- - -	- - -	- - -
	BSI Ribbon Burner Assembly	- - -	10741	- - -	- - -	- - -	- - -	- - -
	Ignitor, Norton 201W	- - -	20834	- - -	- - -	- - -	- - -	- - -
	Ignitor Bracket	- - -	N/A	- - -	- - -	- - -	- - -	- - -
	Flame Sensor, Honeywell 272789	- - -	26878	- - -	- - -	- - -	- - -	- - -
	Flame Sensor Bracket	- - -	21757	- - -	- - -	- - -	- - -	- - -
34	Bottom Manifold Shield	- - -	N/A	- - -	- - -	- - -	- - -	- - -
35	Burner Orifice, Natural Gas, No. 38 DMS	- - -	3051100B (3)	- - -	- - -	- - -	- - -	- - -
	Flue Collection Group *Chimney Vented Models*							
36	Induced Blower Assembly, Kit	26986	26986	26986	26986	26171	26171	26171
37	Gasket, Induced Blower	21873	21873	21873	21873	21873	21873	21873
38	Vent Box	N/A	N/A	N/A	N/A	N/A	N/A	N/A
39	Flue Collection Box	N/A	N/A	N/A	N/A	N/A	N/A	N/A
40	Gasket, Flue Box	N/A	N/A	N/A	N/A	N/A	N/A	N/A
41	Flue Orifice, 1-3/16" Diameter	N/A	- - -	- - -	- - -	- - -	- - -	- - -
41	Flue Orifice, 1-3/8" Diameter	- - -	N/A	N/A	N/A	- - -	- - -	- - -
41	Flue Orifice, 1-1/2" Diameter	- - -	- - -	N/A	- - -	- - -	- - -	- - -
41	Flue Orifice, 1-9/16" Diameter	- - -	- - -	- - -	- - -	N/A	- - -	- - -
41	Flue Orifice, 1-5/8" Diameter	- - -	- - -	- - -	- - -	- - -	N/A	- - -
41	Flue Orifice, 1-11/16" Diameter	- - -	- - -	- - -	- - -	- - -	- - -	N/A
41	Flue Orifice, 1-13/16" Diameter	- - -	- - -	- - -	- - -	- - -	- - -	N/A
42	Vent Safety Switch, 250°F, 60T25, 330733	11060	11060	11060	11060	11060	11060	11060
44	Pressure Switch, +0.20" w.c., X08153	20649	20649	20649	20649	20649	20649	20649
44	Pressure Switch, +0.28" w.c., FS6116-636	- - -	- - -	- - -	- - -	- - -	- - -	- - -
44	Pressure Switch, *from* 26986 Induced Blower Replacement Kit	28308	28308	28308	28308	- - -	- - -	- - -
	Silicon Tubing, 3¾-inch, SR200, 1/8" ID, Clear	11344	11344	11344	11344	11344	11344	11344

	BMS-2 Series Mid Efficiency Lowboy Gas Furnace - Challenger / UltraSave / Turbo 8300							
Ref. No.	**Description**	**BMS-2-75**	**BMS-2-100/90**	**BMS-2-105**	**BMS-2-120**	**BMS-2-130/120**	**BMS-2-130B**	**BMS-2-150**
	NOTE: "T" Suffix indicates Sidewall Vented Unit							
	Flue Collection Group *"T" - Sidewall Vented Models*							
36	Induced Blower Assembly, Kit	26171	26171	26171	26171	26171	26171	26171
37	Gasket, Induced Blower	21873	21873	21873	21873	21873	21873	21873
38	Vent Box	N/A	N/A	N/A	N/A	N/A	N/A	N/A
39	Flue Collection Box	N/A	N/A	N/A	N/A	N/A	N/A	N/A
40	Gasket, Flue Box	N/A	N/A	N/A	N/A	N/A	N/A	N/A
41	Flue Orifice, 1-3/16" Diameter	N/A	- - -	- - -	- - -	- - -	- - -	- - -
41	Flue Orifice, 1-3/8" Diameter	- - -	N/A	- - -	N/A	- - -	- - -	- - -
41	Flue Orifice, 1-1/2" Diameter	- - -	- - -	N/A	- - -	- - -	- - -	- - -
41	Flue Orifice, 1-9/16" Diameter	- - -	- - -	- - -	- - -	N/A	- - -	- - -
41	Flue Orifice, 1-13/16" Diameter	- - -	- - -	- - -	- - -	- - -	N/A	N/A
43	Hose Barb, 1/8"	N/A	N/A	N/A	N/A	N/A	N/A	N/A
	Offset Bracket	N/A	N/A	N/A	N/A	N/A	N/A	N/A
	O-Ring, 0.112 ID x 0.103	N/A	N/A	N/A	N/A	N/A	N/A	N/A
	Brass Nut, 10-32 Hex, Brass	N/A	N/A	N/A	N/A	N/A	N/A	N/A
44	Pressure Switch, +0.35" w.c., FS6116-498	17990	17990	17990	17990	17990	- - -	- - -
44	Pressure Switch, +0.25" w.c., FS6116-764	20829	20829	20829	20829	20829	- - -	- - -
44	Pressure Switch, +0.28" w.c., FS6116-636	- - -	- - -	- - -	- - -	- - -	N/A	N/A
44	Pressure Switch, *from* 26986 Induced Blower Replacement Kit	28308	28308	28308	28308	- - -	- - -	- - -
	Silicon Tubing, 3¾-inch, SR200, 1/8" ID, Clear	11344	11344	11344	11344	11344	11344	11344
	Silicon Tubing, 10-inch, SR200, 1/8" ID, Clear	11344	11344	11344	11344	11344	11344	11344
	Vent Terminal	N/A	N/A	N/A	N/A	N/A	N/A	N/A
	Miscellaneous Group							
	Air Filter, Semi-Permanent, 12 x 20 x 1	N/A	N/A	- - -	- - -	- - -	- - -	- - -
	Air Filter, Semi-Permanent, 16 x 20 x 1	- - -	- - -	2180026	2180026	2180026	- - -	- - -
	Air Filter, Semi-Permanent, 20 x 20 x 1	- - -	- - -	- - -	- - -	- - -	2180032	2180032
	Air Filter Retainer	N/A	N/A	N/A	N/A	N/A	N/A	N/A
	Installation, Operation & Maintenance Manual	N/A	N/A	N/A	N/A	N/A	N/A	N/A
	Pressure Switch, *from* 26986 Induced Blower Replacement Kit	28308	28308	28308	28308	- - -	- - -	- - -

BMS-2 Series Mid Efficiency Lowboy Gas Furnace

Specifications

Natural Gas and Propane:

Model	Ratings BTU/HR		Main Blower	External Static Pressure				CFM	Cooling Capacity		
				.20 W.C.		.50 W.C.			E.S.P. .50 W.C.		
	Input	Output		Speed	Motor	Speed	Motor		Tons	H.P.	CFM Range
BMSII 75	75,000	61,500	D9-6	LO	1/4	HI	1/4	650	2 - 2-1/2	1/4	600 1000
BMSII 100/90	90,000 100,000	70200 78,000	D9-6	MED	1/4	HI	1/4	870	2 - 2-1/2	1/4	600 1000
BMSII 105	105,000	87,150	D10-9	LOW	1/2	HI	1/2	870	2 - 3	1/3	800 1200
BMSII 130/120	120,000 130,000	93,500 100,400	D10-9	MED	1/2	HI	1/2	1120	2 - 3	1/3	800 1200
BMSII 150	150,000	118,500	D10-10T	MED	1/2	HI	1/2	1320	3 - 4	1/2	1000 1600
BMSII 130B	130,000	105,300	D10-10T	LO	1/2	HI	1/2	1120	3 - 4	1/2	1000 1600

Dimensions

Model	Cabinet			Return Plenum (D x G)	Warm Air Plenum (ExD)	Vent Dia. (H)	Filters (Permanent)	Shipping WT. LBS.
	Width A	Depth B	HT. C					
BMSII 75, 100/90	13½	50	34¼	12 x 18¼	12 x 18¼	4	12 x 20 x 1	165
BMSII 105	17½	50	34¼	16 x 18¼	16 x 18¼	4	16 x 20 x 1	195
BMSII 130/120	17½	50	34¼	16 x 18¼	16 x 18¼	4	16 x 20 x 1	195
BMSII 150, 130B	21½	50	34¼	20 x 18¼	20 x 18¼	4	20 x 20 x 1	225