BHS(M) Series Mid Efficiency Lowboy Gas Furnace

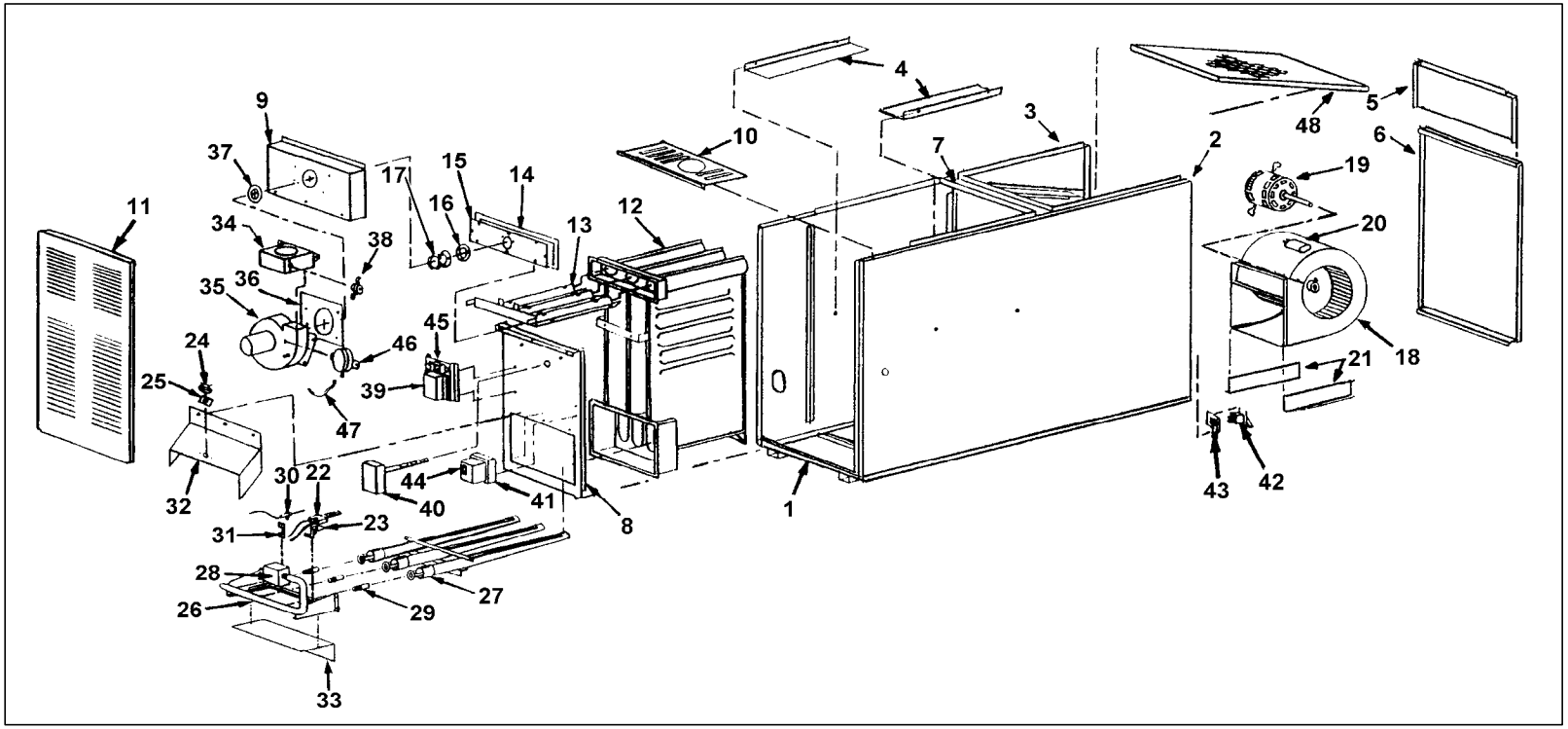

BHS(M) Series Mid Efficiency Lowboy Gas Furnace

Ref. No.	Description	BHS-45M	BHS-60M	BHS-75M	BHS-90M	BHS-105M	BHS-120M
	Sheet Metal Group						
1	Base Panel	N/A	N/A	N/A	N/A	N/A	N/A
2	Right Side Panel Assembly	N/A	N/A	N/A	N/A	N/A	N/A
3	Left Side Panel Assembly	N/A	N/A	N/A	N/A	N/A	N/A
4	Side Panel Baffle, (*2 Required*)	N/A	N/A	N/A	N/A	N/A	N/A
5	Upper Rear Panel	N/A	N/A	N/A	N/A	N/A	N/A
6	Blower Access Panel (Door)	N/A	N/A	N/A	N/A	N/A	N/A
7	Blower Division Panel	N/A	N/A	N/A	N/A	N/A	N/A
	Plenum Edge	N/A	N/A	N/A	N/A	N/A	N/A
8	Inner Front Panel Assembly, Lower	N/A	N/A	N/A	N/A	N/A	N/A
9	Upper Inner Front Panel	N/A	N/A	N/A	N/A	N/A	N/A
10	Top Panel	N/A	N/A	N/A	N/A	N/A	N/A
11	Front Door Panel	N/A	N/A	N/A	N/A	N/A	N/A
12	Heat Exchanger Assembly	N/A	N/A	N/A	N/A	N/A	N/A
13	Heat Exchanger Tube Baffle Assembly	-	-	N/A	N/A	N/A	N/A
14	Gasket, Flue Box Cover	26467	26467	26467	26467	N/A	N/A
15	Flue Box Cover	N/A	N/A	N/A	N/A	N/A	N/A
16	Gasket, Extension Tube	N/A	N/A	N/A	N/A	N/A	N/A
17	Extension Tube	N/A	N/A	N/A	N/A	N/A	N/A
	Integrated Control Mounting Panel	N/A	N/A	N/A	N/A	N/A	N/A
	Controls Mounting Panel	N/A	N/A	N/A	N/A	N/A	N/A
	Filter Retainer	N/A	N/A	N/A	N/A	N/A	N/A
	Blower Group						
	Blower Assembly, Complete	N/A	N/A	N/A	N/A	N/A	N/A
18	Blower Housing & Wheel, DC1020-600-5	N/A	N/A	- - -	- - -	- - -	- - -
18	Blower Housing & Wheel, Morrison 100-8 DD, 05-23655	- - -	- - -	30261	30261	- - -	- - -
18	Blower Housing & Wheel, DC1020-916-5	- - -	- - -	- - -	- - -	N/A	N/A
	Blower Wheel, 10 - 6, unavailable	- - -	- - -	- - -	- - -	- - -	- - -
	Blower Wheel, CM1020-800 (10 - 8)	- - -	- - -	26610	26610	- - -	- - -
	Blower Wheel, CM1020-916 (10 - 9)	- - -	- - -	- - -	- - -	27326	27326
19	Blower Motor, 1/3 hp, 4-Speed, PSC, AOS OLE1036	550001987	550001987	550001987	550001987	- - -	- - -
19	Blower Motor, 1/2 hp, 4-Speed, PSC, G.E. 5KCP39LGY723BS	- - -	- - -	- - -	- - -	102000131	102000131
	Alt: Blower 1/2 HP Motor Kit W/ Mounting Hardware, No Capacitor	- - -	- - -	- - -	- - -	27836	27836
	Alt: Blower 1/2 HP Motor Kit W/ Capacitor, No Hardware	- - -	- - -	- - -	- - -	550001530	550001530
	Motor Mounting Band, TR5868	17811	17811	17811	17811	17811	17811
	Motor Mounting Arms, TR6884B, (*3 Required*)	26251	26251	26251	26251	26251	26251
20	Capacitor, 5 mfd @ 370 vac, M22P3705M00	27741	27741	27741	27741	- - -	- - -
20	Capacitor, 10 mfd @ 370 vac, Z23S3710M01N	- - -	- - -	- - -	- - -	27743	27743
20	Capacitor, 12.5 mfd @ 370 vac M22P3712N00	27744	27744	27744	27744	- - -	- - -

	BHS(M) Series Mid Efficiency Lowboy Gas Furnace						
Ref. No.	Description	BHS-45M	BHS-60M	BHS-75M	BHS-90M	BHS-105M	BHS-120M
	Capacitor Insulator	27769	27769	27769	27769	27769	27769
	Capacitor Strap, N24B 51045-0013	27760	27760	27760	27760	27760	27760
21	Blower Leg, (*2 Required*)	N/A	N/A	N/A	N/A	N/A	N/A
	Gasket, Blower Retainer	N/A	N/A	N/A	N/A	N/A	N/A
	Electrical & Controls Group						
	Note: Units manufactured until Nov. 1994 were equipped with a HSI Ignition System, L6064A Fan/Limit and a Fan Center.						
39	Hot Surface Ignition Control, White-Rodgers 50E47-843	20837	20837	20837	20837	20837	20837
22	Hot Surface Ignitor, Norton 201W, *45 Second Warm-Up*	20834	20834	20834	20834	20834	20834
40	Fan / Limit Control, L6064A, 8 Inch Insertion						
	BHS-45, Limit set to 180°F	12399	- - -	- - -	- - -	- - -	- - -
	BHS-60, Limit set to 200°F	- - -	26511	- - -	- - -	- - -	- - -
	BHS-75, Limit set to 150°F	- - -	- - -	26908	- - -	- - -	- - -
	BHS-90, Limit set to 170°F	- - -	- - -	- - -	26907	- - -	- - -
	BHS-105, Limit set to 190°F	- - -	- - -	- - -	- - -	N/A	- - -
	BHS-120, Limit set to 190°F	- - -	- - -	- - -	- - -	- - -	N/A
41	Junction Box	21318	21318	21318	21318	21318	21318
42	Door Switch, TA22BTLB, SPST	19172	19172	19172	19172	19172	19172
43	Door Switch Bracket	N/A	N/A	N/A	N/A	N/A	N/A
44	Fan Center, (*SPDT switching & 40 VA Transformer*)	27740	27740	27740	27740	27740	27740
	Fan Center Replacement Relay	27767	27767	27767	27767	27767	27767
24	Flame Roll-Out Switch, 36TR16-6031, 350°F	19292	19292	19292	19292	19292	19292
25	Flame Roll-Out Switch Gasket	N/A	N/A	N/A	N/A	N/A	N/A
45	Induced Blower Relay, 9400-11Q, *SPST, 24v Coil*	27739	27739	27739	27739	27739	27739
38	Vent Safety Switch, Therm-O-Disc 60T24, 200°F	N/A	N/A	N/A	N/A	N/A	N/A
46	Pressure Switch						
	FS6676-1328 set at -0.65" w.c.	26513	26513	- - -	- - -	- - -	- - -
	FS6676-1329 set at -0.70" w.c.	- - -	- - -	26514	26514	- - -	- - -
	FS6676-1330 set at -0.85" w.c.	- - -	- - -	- - -	- - -	26515	26515
47	Pressure Switch Tubing, 6", Silicone SR200 1/8" I.D. Clear	11344	11344	11344	11344	11344	11344
	Note: Units manufactured after Nov. 1994 were equipped with an Integrated Control and Therm-O-Disc Limit.						
39	Integrated Control, White-Rodgers 50A55-843	27492	27492	27492	27492	27492	27492
22	Hot Surface Ignitor, Norton 271W, *17 Second Warm-Up*	26789S	26789S	26789S	26789S	26789S	26789S
41	Junction Box	21318	21318	21318	21318	21318	21318
42	Door Switch, TA22BTLB, SPST	19172	19172	19172	19172	19172	19172
43	Door Switch Bracket	N/A	N/A	N/A	N/A	N/A	N/A
24	Flame Roll-Out Switch, 36TR16-6031, 350°F	19292	19292	19292	19292	19292	19292

	BHS(M) Series Mid Efficiency Lowboy Gas Furnace						
Ref. No.	**Description**	**BHS-45M**	**BHS-60M**	**BHS-75M**	**BHS-90M**	**BHS-105M**	**BHS-120M**
25	Flame Roll-Out Switch Gasket	N/A	N/A	N/A	N/A	N/A	N/A
38	Vent Safety Switch, Therm-O-Disc 60T24, 200°F	N/A	N/A	N/A	N/A	N/A	N/A
46	Pressure Switch						
	FS6676-1328 set at -0.65" w.c.	26513	26513	- - -	- - -	- - -	- - -
	FS6676-1329 set at -0.70" w.c.	- - -	- - -	26514	26514	- - -	- - -
	FS6676-1330 set at -0.85" w.c.	- - -	- - -	- - -	- - -	26515	26515
47	Pressure Switch Tubing, 6", Silicone SR200 1/8" I.D. Clear	11344	11344	11344	11344	11344	11344
	Junction Box Cover	3011160A	3011160A	3011160A	3011160A	3011160A	3011160A
	Transformer, 120/24v, 40VA, BE161640REK0028	550001533	550001533	550001533	550001533	550001533	550001533
	Limit Switch, Therm-O-Disc 36T01B3, 170°F, 42395, 3" Insertion	27387	27387	27387	27387	27387	27387
	Gasket, Limit Switch	26762	26762	26762	26762	26762	26762
	Wiring Harness, BHS	N/A	N/A	N/A	N/A	N/A	N/A
	Burner Group						
	Burner Assembly, Natural Gas, Complete	N/A	N/A	N/A	N/A	N/A	N/A
22	Hot Surface Ignitor, Norton 201W, *45 Second Warm-Up*	20834	20834	20834	20834	20834	20834
22	Hot Surface Ignitor, Norton 271W, *17 Second Warm-Up*	26789S	26789S	26789S	26789S	26789S	26789S
23	Ignitor Bracket	N/A	N/A	N/A	N/A	N/A	N/A
24	Flame Roll-Out Switch, 36TR16-6031, 350°F	19292	19292	19292	19292	19292	19292
25	Flame Roll-Out Switch Gasket	N/A	N/A	N/A	N/A	N/A	N/A
26	Manifold Assembly	N/A	N/A	N/A	N/A	N/A	N/A
27	BSI Ribbon Burner Assembly	16725	16725	10741	10741	16726	16726
28	Gas Valve, Natural Gas, VR8205A2008B	26180	26180	26180	26180	26180	26180
28	Gas Valve, L.P. Gas, VR8205A2016B	26181	26181	26181	26181	26181	26181
	Natural Gas Regulator Spring, *Honeywell 394588*	19021	19021	19021	19021	19021	19021
	L.P. Gas Regulator Spring, *Honeywell 393691*	19020	19020	19020	19020	19020	19020
29	Burner Orifice, Natural Gas						
	BHS-45, No. 43 DMS, (*2 Required*)	3051094B	- - -	- - -	- - -	- - -	- - -
	BHS-60, No. 37 DMS, (*2 Required*)	- - -	N/A	- - -	- - -	- - -	- - -
	BHS-75, No. 41 DMS, (*3 Required*)	- - -	- - -	10357	- - -	- - -	- - -
	BHS-90, No. 37 DMS, (*3 Required*)	- - -	- - -	- - -	N/A	- - -	- - -
	BHS-105, No. 41 DMS, (*4 Required*)	- - -	- - -	- - -	- - -	10357	- - -
	BHS-120, No. 37 DMS, (*4 Required*)	- - -	- - -	- - -	- - -	- - -	N/A
29	Burner Orifice, L.P. Gas						
	BHS-45, No. 54 DMS, (*2 Required*)	N/A	- - -	- - -	- - -	- - -	- - -
	BHS-60, No. 52 DMS, (*2 Required*)	- - -	3051110B	- - -	- - -	- - -	- - -
	BHS-75, No. 53 DMS, (*3 Required*)	- - -	- - -	3051111B	- - -	- - -	- - -
	BHS-90, No. 52 DMS, (*3 Required*)	- - -	- - -	- - -	3051110B	- - -	- - -
	BHS-105, No. 53 DMS, (*4 Required*)	- - -	- - -	- - -	- - -	3051111B	- - -
	BHS-120, No. 52 DMS, (*4 Required*)	- - -	- - -	- - -	- - -	- - -	3051110B

	BHS(M) Series Mid Efficiency Lowboy Gas Furnace						
Ref. No.	**Description**	**BHS-45M**	**BHS-60M**	**BHS-75M**	**BHS-90M**	**BHS-105M**	**BHS-120M**
30	Flame Sensor, *Honeywell 272789*	26878	26878	26878	26878	26878	26878
31	Flame Sensor Bracket	21757	21757	21757	21757	21757	21757
32	Upper Heat Shield	N/A	N/A	N/A	N/A	N/A	N/A
33	Lower Heat Shield	N/A	N/A	N/A	N/A	N/A	N/A
	Venting Group						
34	Vent Box Assembly	26912	26912	26912	26912	26912	26912
15	Flue Box Cover	N/A	N/A	N/A	N/A	N/A	N/A
14	Gasket, Flue Box Cover	26467	26467	26467	26467	N/A	N/A
16	Gasket, Extension Tube	N/A	N/A	N/A	N/A	N/A	N/A
17	Extension Tube	N/A	N/A	N/A	N/A	N/A	N/A
35	Induced Blower Assembly, (Kit)	26607	26607	26607	26607	26607	26607
36	Gasket, Induced Blower	21873	21873	21873	21873	21873	21873
45	Induced Blower Relay, 9400-11Q, *SPST, 24v Coil*	27739	27739	27739	27739	27739	27739
37	Chute Orifice						
	BHS-45, 1.00 " I.D.	N/A	- - -	- - -	- - -	- - -	- - -
	BHS-60, 1.12 " I.D.	- - -	N/A	- - -	- - -	- - -	- - -
	BHS-75, 1.23 " I.D.	- - -	- - -	N/A	- - -	- - -	- - -
	BHS-90, 1.40 " I.D.	- - -	- - -	- - -	N/A	- - -	- - -
	BHS-105, 1.50 " I.D.	- - -	- - -	- - -	- - -	N/A	- - -
	BHS-120, 1.60 " I.D.	- - -	- - -	- - -	- - -	- - -	N/A
38	Vent Safety Switch, Therm-O-Disc 60T24, 200°F	N/A	N/A	N/A	N/A	N/A	N/A
46	Pressure Switch						
	FS6676-1328 set at -0.65" w.c.	26513	26513	- - -	- - -	- - -	- - -
	FS6676-1329 set at -0.70" w.c.	- - -	- - -	26514	26514	- - -	- - -
	FS6676-1330 set at -0.85" w.c.	- - -	- - -	- - -	- - -	26515	26515
47	Pressure Switch Tubing, 6", Silicone SR200 1/8" I.D. Clear	11344	11344	11344	11344	11344	11344
	Miscellaneous Group						
48	Air Filter, 16 x 25 x 1, Semi-Permanent	2180023	2180023	2180023	2180023	2180023	2180023
	Installation, Operation & Maintenance Manual	N/A	N/A	N/A	N/A	N/A	N/A
	Conversion Kit, Natural Gas to L.P. Gas	N/A	N/A	N/A	N/A	N/A	N/A
	Conversion Kit, L.P. Gas to Natural Gas	N/A	N/A	N/A	N/A	N/A	N/A

BHS(M) Series Mid Efficiency Lowboy Gas Furnace

Specifications

Natural Gas and Propane:

Model	Ratings BTU/HR 0-2000'		Main Blower	External Static Pressure Direct Drive			Cooling Capacity			AFUE
	Input	Output		.20 W.C.	.50 W.C.	HP	Tons	HP	MAX CFM	
BHS 45	45,000	37,400	10-6	M.LO	M.HI	1/3	2	1/3	1250	80.5
BHS 60	60,000	49,800	10-6	M.HI	HI	1/3	2½	1/3	1250	80.5
BHS 75	75,000	62,300	10-8	M.HI	M.HI	1/3	3	1/3	1350	80.5
BHS 90	90,000	74,700	10-8	M.HI	HI	1/3	3	1/3	1350	80.5
BHS 105	105,000	87,200	10-9	M.HI	HI	1/2	3½	1/2	1500	80.5
BHS 120	120,000	99,600	10-9	M.HI	HI	1/2	3½	1/2	1500	80.5

Dimensions

Model	Cabinet			Return Plenum (FxG)	Warm Air Plenum (ExD)	Air Filter	Vent Dia.	Clearances					Shipping WT. LBS.
	Width A	Depth B	HT. C					Top	Front	Sides	Back	Vent	
BHS 45-120	17½	50	33-7/8	16x18¼	16x18¼	16x25x1	3-4	1	6	1	6	6	199