HHS(T) Series Mid Efficiency Highboy Gas Furnace

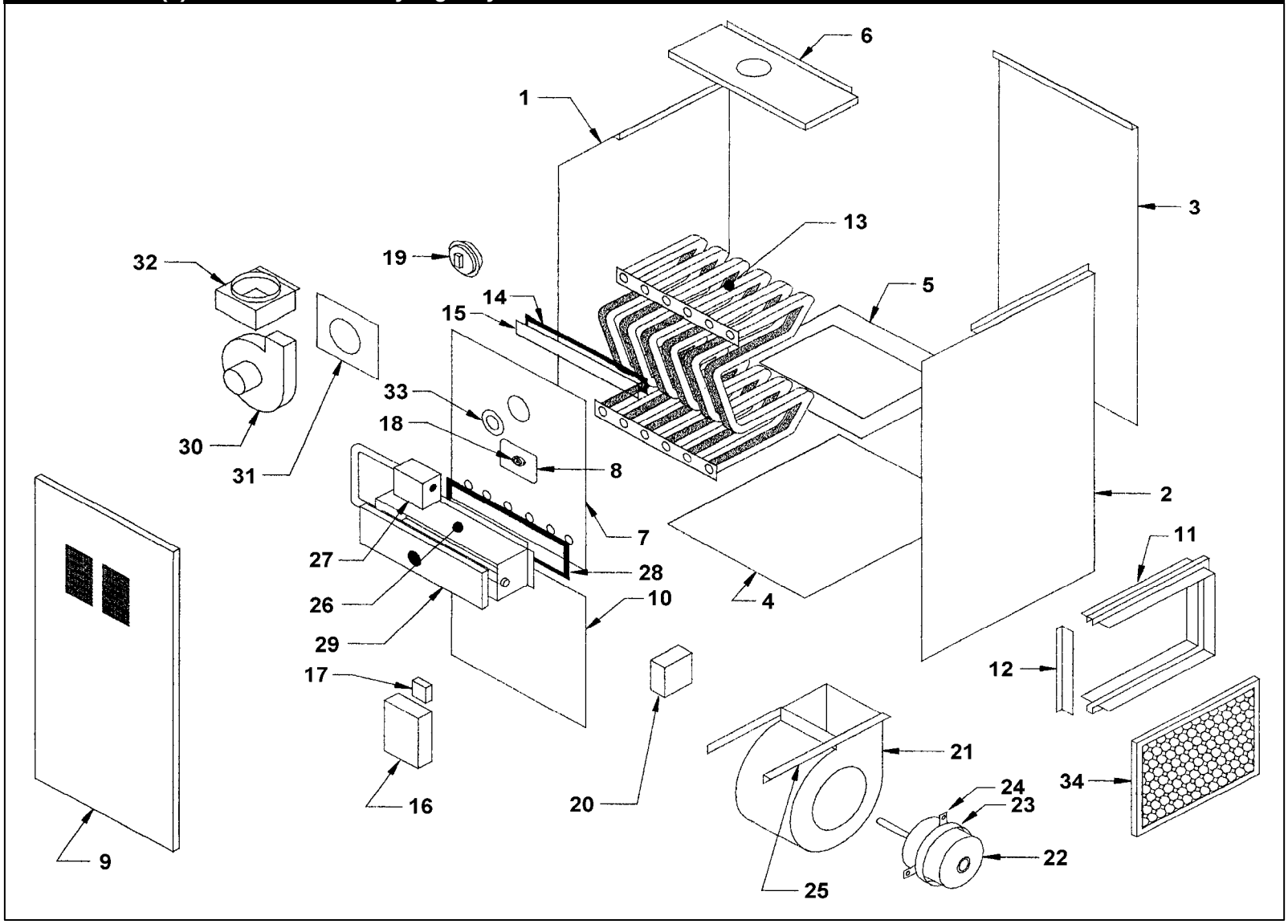

	HHS(T) Series Mid Efficiency Highboy Gas Furnace			
Ref. No.	**Description**	**HHS-75T**	**HHS-90T**	**HHS-110T**
	Sheet Metal Group			
1	Left Side Panel	N/A	N/A	N/A
2	Right Side Panel	N/A	N/A	N/A
3	Rear Panel	N/A	N/A	N/A
4	Base Panel	N/A	N/A	N/A
5	Blower Division Panel (Assembly)	N/A	N/A	N/A
6	Top Panel	N/A	N/A	N/A
7	Inner Front Panel Assembly	N/A	N/A	N/A
8	Limit Dish	N/A	N/A	N/A
9	Front Door Panel	N/A	N/A	N/A
10	Door Panel	N/A	N/A	N/A
	Baffle, Rear Panel, (*2 Required*)	N/A	N/A	N/A
11	Filter Frame, 20 x 20 x 1	21260	21260	21260
12	Filter Frame End Support	21306	21306	21306
13	Heat Exchanger Assembly	N/A	N/A	N/A
	Bracket, Heat Exchanger Support (*2 Required*)	N/A	N/A	N/A
	Flue Box	N/A	N/A	N/A
14	Gasket, Flue Box	N/A	N/A	N/A
15	Flue Box Cover	N/A	N/A	N/A
	Gasket, Heat Exchanger Top, (*2 Required*)	N/A	N/A	N/A
	Bracket, Limit Shield	N/A	N/A	N/A
	Electrical & Controls Group			
16	Control, Integrated, White-Rodgers 50A55-843	27492	27492	27492
	Ignitor, Norton 271W, *17 Second Warm-Up*	26789S	26789S	26789S
17	Transformer, 120V/24V 40VA, Basler Electric BE161640REK0028	550001533	550001533	550001533
18	Limit, 130°F, Therm-O-Disc 610002, 60T11, L130	28092	28092	- - -
18	Limit, 150°F, Therm-O-Disc 201787, 60T11, L150	- - -	- - -	N/A
	Limit, HALC, 105°F, Therm-O-Disc, 69T11, L105	- - -	- - -	N/A
19	Pressure Switch, -0.70" w.c., XO8144	26514	26514	- - -
19	Pressure Switch, -0.65" w.c., FS6676-1328	- - -	- - -	26513
	Flame Roll-Out Switch, 200°F, 36TX16-6566, L200, (*2 Required*)	28158	28158	28158
	Door Switch, TA22BTLB, SPST	19172	19172	19172
	Door Switch Bracket	N/A	N/A	N/A
20	Junction Box	21318	21318	21318
	Wiring Harness, Controls	28099	28099	28099
	Blower Group			
	Blower Assembly, Complete	N/A	N/A	N/A
21	Blower Housing and Wheel, 100-10T DD Morrison	30626	30626	- - -
21	Blower Housing and Wheel, G10 DD	- - -	- - -	N/A
	Blower Wheel, 10-10 DD	26430	26430	26430
22	Blower Motor, 1/2 hp, 4-Speed, PSC, G.E. 5KCP39LGY723BS	102000131	102000131	102000131
	Alt: Blower 1/2 HP Motor Kit W/ Mounting Hardware, No Capacitor	27836	27836	27836
	Alt: Blower 1/2 HP Motor Kit W/ Capacitor, No Hardware	550001530	550001530	550001530
23	Motor Mounting Band, TR5868	17811	17811	17811
24	Motor Mounting Arm, TR6884B, (*3 Required*)	26251	26251	26251
	Capacitor, 10 mfd @ 370 vac, Z23S3710M01N	27743	27743	27743
	Capacitor Strap, N-24B, 51045-0013	27760	27760	27760
	Capacitor Insulator, 44603-0009	27769	27769	27769
25	Blower Slide Rail, (*2 Required*)	27897	27897	27897
	Burner Group			
26	Combustion Box Assembly - Complete	N/A	N/A	N/A
27	Gas Valve, Natural Gas, VR8205A2008B	26180	26180	26180
	Regulator Spring, L.P. Gas, Honeywell 393691	19020	19020	N/A

	HHS(T) Series Mid Efficiency Highboy Gas Furnace			
Ref. No.	**Description**	**HHS-75T**	**HHS-90T**	**HHS-110T**
	Regulator Spring, Natural Gas, Honeywell 394588	19021	19021	19021
	Manifold Pipe Assembly	N/A	N/A	N/A
	Burner Orifice			
	HHS-075T, Natural Gas, No. 50 DMS (*6 required*)	28290	- - -	- - -
	HHS-090T, Natural Gas, No. 49 DMS (*6 required*)	- - -	28184	- - -
	HHS-110T, Natural Gas, No. 47 DMS (*6 required*)	- - -	- - -	N/A
	HHS-075T, L.P. Gas, No. 61 DMS (*6 required*)	N/A	- - -	- - -
	HHS-090T, L.P. Gas, No. 56 DMS (*6 required*)	- - -	28291	- - -
	HHS-110T, L.P. Gas, NOT CERTIFIED	N/A	N/A	N/A
	Inshot Burner, Beckett DM005, (*6 Required*)	28116	28116	28116
	Ignitor, Norton 271W, *17 Second Warm-Up*	26789S	26789S	26789S
	Ignitor Bracket	N/A	N/A	N/A
	Flame Sensor, Honeywell 272789	26878	26878	26878
	Flame Roll-Out Switch, 200°F, 36TX16-6566, L200, (*2 Required*)	28158	28158	28158
	Grommet, Manifold Pipe	N/A	N/A	N/A
	Combustion Box	N/A	N/A	N/A
	Combustion Box Top	N/A	N/A	N/A
	Burner Bracket	N/A	N/A	N/A
	Combustion Box Top Baffle	N/A	N/A	N/A
	Combustion Air Baffle	N/A	N/A	N/A
28	Gasket, Combustion Box	N/A	N/A	N/A
29	Combustion Box Cover Assembly	N/A	N/A	N/A
	Sight Glass	N/A	N/A	N/A
	Sight Glass Retainer Plate	N/A	N/A	N/A
	Sight Glass Gasket	N/A	N/A	N/A
	Venting Group			
30	Induced Blower Assembly Replacement Kit	28436	28436	28436
31	Gasket, Induced Blower	21873	21873	21873
32	Vent Box Assembly	26912	26912	26912
33	Chute Orifice, 1.38" I.D.	N/A	- - -	- - -
33	Chute Orifice, 1.52" I.D.	- - -	N/A	- - -
33	Chute Orifice, 1.65" I.D.	- - -	- - -	N/A
19	Pressure Switch, -0.70" w.c., XO8144	26514	26514	- - -
19	Pressure Switch, -0.65" w.c., FS6676-1328	- - -	- - -	26513
	Silicone Tubing, SR200, 1/8" I.D., Clear (*per foot*)	11344	11344	11344
	Miscellaneous Group			
34	Air Filter, 20 x 20 x 1, Semi-Permanent	2180032	2180032	2180032
	Installation, Operation & Maintenance Manual	N/A	N/A	N/A
	User's Manual	N/A	N/A	N/A
	Conversion Kit, Natural Gas to L.P. Gas	N/A	N/A	N/A
	Conversion Kit, L.P. Gas to Natural Gas	28348	28348	- - -

HHS(T) Series Mid Efficiency Highboy Gas Furnace

Specifications

Natural Gas and Propane:

Model	Ratings BTU/HR 0-2000' Input	Ratings BTU/HR 0-2000' Output	Main Blower	External Static Pressure Direct Drive .20 W.C.	External Static Pressure Direct Drive .50 W.C.	External Static Pressure Direct Drive HP	Cooling Capacity Tons	Cooling Capacity HP	Cooling Capacity MAX CFM	Shipping WT. LBS.
HHST 75T	75,000	62,300	10-10T	M.HI	HI	1/2	1.5 - 4.0	1/2	1700	182
HHST 90T	90,000	74,700	10-10T	M.HI	HI	1/2	1.5 - 4.0	1/2	1700	182
HHST 110T	110,000	85,800	10-10T	HI	HI	1/2	1.5 - 4.0	1/2	1700	182

Dimensions

Model	Cabinet Width A	Cabinet Depth B	Cabinet HT. C	Return Plenum (FxG)	Warm Air Plenum (ExD)	Air Filter	Vent Dia.	Clearances Top	Clearances Front	Clearances Sides	Clearances Back	Clearances Vent
HHST 75-110T	21-1/2	28	46	18 x 18	20 x 18-1/2	20x20x1	4	1	6	1	1	6