HBA Series - Mid-Efficiency Horizontal Gas-Fired Furnace (Consolidated)

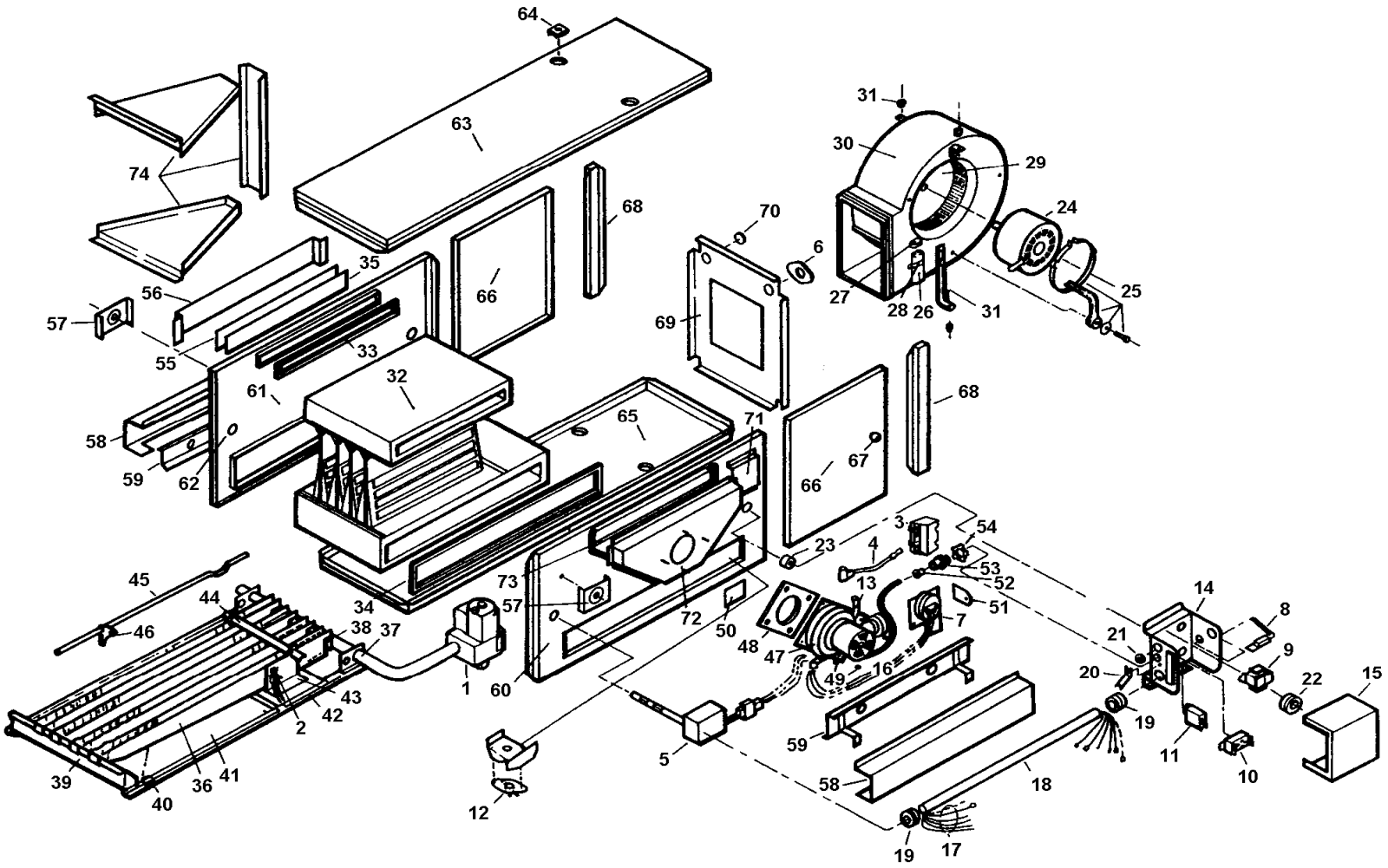

	HBA Series - Mid-Efficiency Horizontal Gas-Fired Furnace (Consolidated)					
		40,000	60,000	80,000	100,000	120,000
Ref #	**Description**	**HBA040ND3R**	**HBA060ND3R**	**HBA080ND4R**	**HBA100ND5R**	**HBA120ND5R**
	npn=no part number, N/A=not applicable nla=no longer available					
	Controls Group					
	Electronic Ignition					
1	Gas Control, Natural Gas, Honeywell VR8204A2175/B	14662052	14662052	14662052	14662052	14662052
2	Pilot/Ignitor, Honeywell Q345A	C301193	C301193	C301193	C301193	C301193
3	Lockout Module, Honeywell S8600H3002B	21452	21452	21452	21452	21452
4	Lockout Module Wiring - Complete Kit	N/A	N/A	N/A	N/A	N/A
	Ignition Wire Only	C300776	C300776	C300776	C300776	C300776
	Electrical Group					
5	Fan/Limit Control Kit - Honeywell L4064T	N/A	N/A	N/A	N/A	N/A
6	Auxiliary Limit Switch	N/A	N/A	N/A	N/A	N/A
7	Pressure Switch with Wiring Harness	N/A	N/A	N/A	N/A	N/A
8	Blower Door Interlock Switch	C300229	C300229	C300229	C300229	C300229
9	Transformer, 40VA	C207023	C207023	C207023	C207023	C207023
10	Blower Relay	C207025	C207025	C207025	C207025	C207025
11	Draft Inducer Relay, DPST, 24v Coil	N/A	N/A	N/A	N/A	N/A
	Burner Limit, Thermodisc, L350°F	N/A	3013631	3013631	3013631	3013631
	Hardware					
12	Pressure Switch Tubing	11344	11344	11344	11344	11344
13	Junction Box	N/A	N/A	N/A	N/A	N/A
14	Junction Box Cover	N/A	N/A	N/A	N/A	N/A
15	Pressure Switch Wiring Harness	npn	npn	npn	npn	npn
16	Fan/Limit Control Wiring Harness	N/A	N/A	N/A	N/A	N/A
17	Fan/Limit Conduit	N/A	N/A	N/A	N/A	N/A
18	Fan/Limit Conduit Grommet (*2 Required*)	N/A	N/A	N/A	N/A	N/A
19	Fan/Limit Conduit Grounding Bracket	N/A	N/A	N/A	N/A	N/A
20	Low Voltage Wire Bushing	N/A	N/A	N/A	N/A	N/A
21	Strain Relief	N/A	N/A	N/A	N/A	N/A
22	3/4-inch Bushing	N/A	N/A	N/A	N/A	N/A
	Blower Group					
	Blower Assembly	N/A	C300247	C300249	N/A	C300252
23	Blower Motor	N/A	N/A	N/A	N/A	N/A
24	Motor Mounting Hardware Kit	N/A	C300667	C300667	C300667	C300667
25	Capacitor, 7.5 mfd@370vac	27742	27742	27742	27742	27742
26	Capacitor Boot	N/A	N/A	N/A	N/A	N/A

	HBA Series - Mid-Efficiency Horizontal Gas-Fired Furnace (Consolidated)					
		40,000	60,000	80,000	100,000	120,000
Ref #	**Description**	**HBA040ND3R**	**HBA060ND3R**	**HBA080ND4R**	**HBA100ND5R**	**HBA120ND5R**
	npn=no part number, N/A=not applicable nla=no longer available					
27	Capacitor Strap	N/A	N/A	N/A	N/A	N/A
28	Blower Wheel, Direct Drive, 10 - 4	N/A	-	-	-	-
28	Blower Wheel, Direct Drive, 10 - 6	-	C2070402	-	-	-
28	Blower Wheel, Direct Drive, 10 - 8	-	-	N/A	-	-
28	Blower Wheel, Direct Drive, 10 - 10	-	-	-	C2070442	C2070442
29	Blower Housing and Cutoff Assembly	N/A	N/A	N/A	N/A	N/A
30	Blower Feet and Grommet Kit	N/A	N/A	N/A	C300862	C300862
	Heat Exchanger Group					
31	Heat Exchanger Assembly	N/A	N/A	N/A	N/A	N/A
32	Collector Box Gasket, (*2 Required*)	N/A	N/A	N/A	N/A	N/A
33	Burner Box Gasket, (*2 Required*)	N/A	N/A	N/A	N/A	N/A
34	Collector Box Plate Gasket	N/A	N/A	N/A	N/A	N/A
	Burner Group					
	Burner Rack Assembly without Gas Controls	N/A	C301169	N/A	N/A	N/A
35	Main Burner	N/A	N/A	N/A	N/A	N/A
36	Manifold, (with Orifices)	N/A	N/A	N/A	N/A	N/A
37	Main Burner Orifice (Natural Gas)	N/A	N/A	N/A	N/A	N/A
38	Rear Support End Plate	N/A	N/A	N/A	N/A	N/A
39	Locating Clip, (*2 Required*)	C300385	C300385	C300385	C300385	C300385
40	Radiation Shield	N/A	N/A	N/A	N/A	N/A
41	Side Rail, (*2 Required*)	N/A	N/A	N/A	N/A	N/A
42	Ignition & Crossover Support Plate Assembly	N/A	C300371	N/A	N/A	N/A
43	Crossover Angle	N/A	N/A	N/A	N/A	N/A
	California Only May Need Low NOx Parts Added					
44	Glo-Rod	N/A	N/A	N/A	N/A	N/A
45	Glo-Rod Support Clip	N/A	N/A	N/A	N/A	N/A
	Draft Inducer Group					
46	Draft Inducer Assembly	N/A	N/A	N/A	N/A	N/A
47	Draft Inducer Assembly Gasket	N/A	N/A	N/A	N/A	N/A
48	#8-32 Hex Nuts, (*4 Required*)	N/A	N/A	N/A	N/A	N/A
49	Inlet Restrictor Plate	N/A	C302070	N/A	N/A	n/a
50	Outlet Restrictor Plate	N/A	C302074	N/A	n/a	n/a
51	Anti-Short Bushing	N/A	N/A	N/A	N/A	N/A

	HBA Series - Mid-Efficiency Horizontal Gas-Fired Furnace (Consolidated)					
		40,000	60,000	80,000	100,000	120,000
Ref #	**Description**	**HBA040ND3R**	**HBA060ND3R**	**HBA080ND4R**	**HBA100ND5R**	**HBA120ND5R**
	npn=no part number, N/A=not applicable nla=no longer available					
52	Flexible Conduit Connector	N/A	N/A	N/A	N/A	N/A
53	Flexible Conduit Connector Nut	npn	npn	npn	npn	npn
	Casing Group					
54	Collector Box Plate	N/A	N/A	N/A	N/A	N/A
55	Collector Box Heat Shield	N/A	N/A	N/A	N/A	N/A
56	Collector Box Heat Deflector	C300666	C300666	C300666	C300666	C300666
57	Burner Cover, (*2 Required*)	N/A	N/A	N/A	N/A	N/A
58	Burner Side Shield, (*2 Required*)	N/A	N/A	N/A	N/A	N/A
59	Front Panel	C300171	C300171	C300171	C300171	C300171
60	Rear Panel	C300175	C300175	C300175	C300175	C300175
61	7/8-inch Hole Plug, (*2 Required*)	N/A	N/A	N/A	N/A	N/A
62	Top Panel	N/A	N/A	N/A	N/A	C300741
63	Blower Mounting Nut, (*2 Required*)	N/A	N/A	N/A	N/A	N/A
64	Bottom Panel	N/A	N/A	N/A	N/A	C300853
65	Blower Door, (*2 Required*)	C300177	C300177	C300177	C300177	C300177
66	Blower Door Knob, (*2 Required*)	N/A	N/A	N/A	N/A	N/A
67	Corner Post, (*2 Required*)	N/A	N/A	N/A	N/A	N/A
68	Blower Panel	N/A	N/A	N/A	N/A	N/A
69	1-inch Hole Plug	N/A	N/A	N/A	N/A	N/A
70	Lockout Module Mounting Bracket	N/A	N/A	N/A	N/A	N/A
71	Induced Draft Collector Box Assembly	C3020381	C3020381	C3020381	C3020381	C3020381
72	Induced Draft Collector Box Assembly Gasket	N/A	N/A	N/A	N/A	N/A
	Accessory Group					
73	Filter Frame Kit	C300650	C300653	300655	C300657	C300659
	Propane Conversion Kit	N/A	N/A	N/A	N/A	N/A
	Nat. to L.P. Conversion Kit (Cdn.)					
	L.P. to Nat. Conversion Kit (Cdn.)					
	High Altitude Kit, Canada, 2000 - 4500 Feet					

HBA Series - Mid-Efficiency Horizontal Gas-Fired Furnace (Consolidated)

Specifications

Model	Input	Output	AFUE	Motor-HP Type Speeds	Blower Size	Temp. Rise (°F)	Motor Fla	Motor Speed	CFM External Static Pressure (W.C.)			
									.2	.3	.4	.5
HBA040ND3R	40,000	31,000	80.1	1/4 HP PSC 3-Speed	10-4	35-65	6.1	HIGH	1380	1330	1275	1210
								MED	1110	1075	1015	985
								LOW	890	875	825	805
HBA060ND3R	60,000	47,000	80.1	1/4 HP PSC 3-Speed	10-6	30-60	8.2	HIGH	1565	1540	1505	1450
								MED	1455	1425	1385	1330
								LOW	1285	1245	1230	1215
HBA080ND4R	80,000	63,000	80.1	1/3 HP PSC 3-Speed	10-8	25-55	5.0	HIGH	1780	1745	1700	1630
								MED	1520	1500	1475	1425
								LOW	1250	1240	1230	1215
HBA100ND5R	100,000	78,000	80.1	1/2 HP PSC 3-Speed	10-10	35-65	9.9	HIGH	2220	2145	2055	1955
								MED	1750	1715	1675	1620
								LOW	1525	1500	1465	1415
HBA120ND5R	120,000	94,000	80.1	1/2 HP PSC 3-Speed	10-10	45-75	9.9	HIGH	2300	2210	2110	1985
								MED	1760	1730	1690	1630
								LOW	1540	1520	1495	1445

Dimensions

Model	Vent Pipe	Induced Draft	Plenum Size	Furnace Width	Suspension Location	Shipping Wt.
HBA040ND3R	3	7¼	21 x 9¼	11	37¼ x 9½	167
HBA060ND3R	3	7¼	21 x 12¼	13½	37¼ x 12	178
HBA080ND4R	3	7¼	21 x 14¼	16	37½ x 14½	187
HBA100ND5R	3	7¼	21 x 17¼	18½	37½ x 17	210
HBA120ND5R	3	7¼	21 x 19¼	21	37½ x 19½	234