NUP Series - High Efficiency Upflow Gas-Fired Furnace (Consolidated)

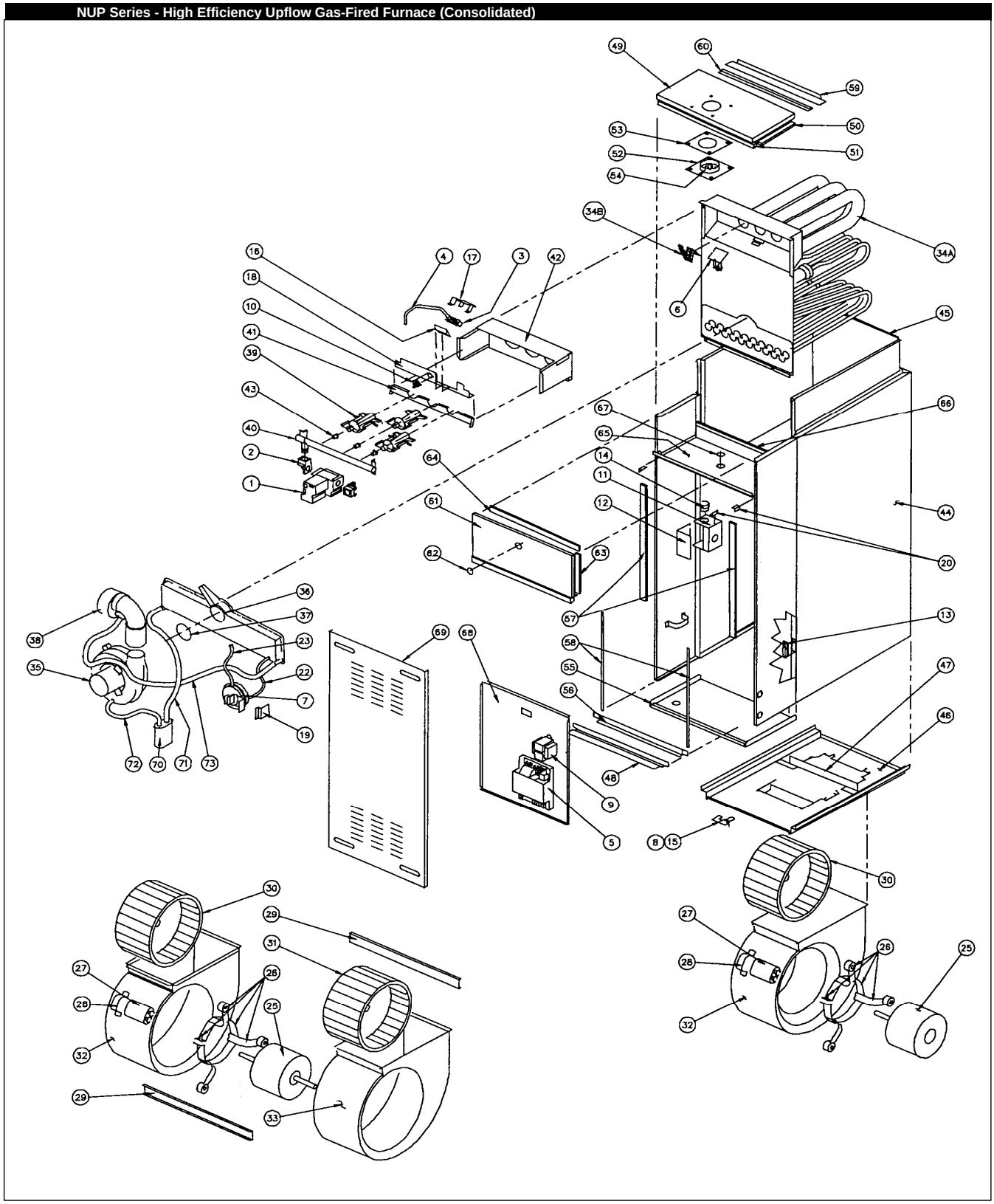

	NUP Series - High Efficiency Upflow Gas-Fired Furnace (Consolidated)							
		54000	72000	72000	90000	90000	108000	126000
Ref #	**Description**	**NUP054N12**	**NUP072N12**	**NUP072N16**	**NUP090N12**	**NUP090N16**	**NUP108N20**	**NUP126N20**
		1/3 hp	1/2 hp	3/4 hp	1/2 hp	3/4 hp	3/4 hp	3/4 hp
	Consolidated Reference No.	054-3	072-3	072-4	090-3	090-4	108-5	126-5
	Controls Group							
1	Gas Control, Natural Gas, Honeywell SV9500M	C4211700	C4211700	C4211700	C4211700	C4211700	C4211700	C4211700
2	Inlet Gas Connector	C4085300	C4085300	C4085300	C4085300	C4085300	C4085300	C4085300
3	Pilot/Ignitor, Honeywell Q3450D	C4103200	C4103200	C4103200	C4103200	C4103200	C4103200	C4103200
4	Pilot Tubing	3051126A	3051126A	3051126A	3051126A	3051126A	3051126A	3051126A
5	Fan Timer (406650)	C4116000	C4116000	C4116000	C4116000	C4116000	C4116000	C4116000
5	Fan Timer, w/ cont. low speed fan option, (425850)	C4258600	C4258600	C4258600	C4258600	C4258600	C4258600	C4258600
6	Primary Limit Switch	C4035002	C4035000	C4035000	C4035003	C4035000	C4035002	C4035004
7	Pressure Switch	C4213000	C4213000	C4213000	C4213000	C4213000	C4213000	C4213000
7	High Altitude Pressure Switch	N/A	N/A	N/A	N/A	N/A	N/A	N/A
8	Power Disconnect	N/A	N/A	N/A	N/A	N/A	N/A	N/A
9	Transformer, 40VA	C4100800	C4100800	C4100800	C4100800	C4100800	C4100800	C4100800
10	Burner Limit Switch	C4035300	C4035300	C4035300	C4035300	C4035300	C4035300	C4035300
	Hardware							
11	Junction Box	N/A	N/A	N/A	N/A	N/A	N/A	N/A
12	Junction Box Cover	N/A	N/A	N/A	N/A	N/A	N/A	N/A
13	Hem Bushing	N/A	N/A	N/A	N/A	N/A	N/A	N/A
14	Strain Relief	N/A	N/A	N/A	N/A	N/A	N/A	N/A
15	Disconnect Bracket	N/A	N/A	N/A	N/A	N/A	N/A	N/A
16	Pilot Mounting Bracket	C420510	C420510	C420510	C420510	C420510	C420510	C420510
17	Pilot Shield	N/A	N/A	N/A	N/A	N/A	N/A	N/A
18	Secondary Air Shield	N/A	N/A	N/A	N/A	N/A	N/A	N/A
19	Pressure Switch Bracket	N/A	N/A	N/A	N/A	N/A	N/A	N/A
20	Support Bracket (*3 Required*)	N/A	N/A	N/A	N/A	N/A	N/A	N/A
21	Wire Harness Kit (*not shown*)	C4212000	C4212000	C4212000	C4212000	C4212000	C4212000	C4212000
22	Pressure Switch Tubing	N/A	N/A	N/A	N/A	N/A	N/A	N/A
23	Pressure Switch Tubing	N/A	N/A	N/A	N/A	N/A	N/A	N/A
	Blower Group							
24	Blower Assembly	C4102805	C4102803	C4102900	C4102803	C4102900	N/A	N/A
25	Blower Motor	N/A	C4212300	N/A	C4212300	N/A	C4212400	C4212400
26	Motor Mounting Kit	C4038700	C4038700	C4038701	C4038700	C4038701	C4038701	C4038701
27	Capacitor	C4036002	C4036002	C4036001	C4036002	C4036001	C4036001	C4036001

	NUP Series - High Efficiency Upflow Gas-Fired Furnace (Consolidated)							
		54000	72000	72000	90000	90000	108000	126000
Ref #	**Description**	**NUP054N12**	**NUP072N12**	**NUP072N16**	**NUP090N12**	**NUP090N16**	**NUP108N20**	**NUP126N20**
		1/3 hp	1/2 hp	3/4 hp	1/2 hp	3/4 hp	3/4 hp	3/4 hp
	Consolidated Reference No.	054-3	072-3	072-4	090-3	090-4	108-5	126-5
28	Capacitor Strap	N/A	N/A	N/A	N/A	N/A	N/A	N/A
29	Blower Housing Support	n/a	n/a	N/A	n/a	N/A	N/A	N/A
30	Blower Wheel, Direct Drive, (Convex)	C4039502	C4039504	C4039500	C4039504	C4039500	C4039502	C4039502
31	Blower Wheel, Direct Drive, (Concave)	n/a	n/a	C4039501	n/a	C4039501	N/A	N/A
32	Blower Housing	C4102401	C4102402	N/A	C4102402	N/A	N/A	N/A
33	Blower Housing	n/a	n/a	C4102404	n/a	C4102404	N/A	N/A
	Heat Exchanger Group							
34	Heat Exchanger Assembly	N/A	N/A	N/A	N/A	N/A	N/A	N/A
	Draft Inducer Group							
35	Draft Inducer Motor Assembly	C4246100	C4246100	C4246100	C4246101	C4246101	C4246101	C4246101
36	Inducer Pan Assembly	C4218500	C4218500	C4218500	C4218500	C4218500	C4218501	C4218501
	Inducer Pan Gasket	C4249000	C4249000	C4249000	C4249000	C4249000	C4249000	C4249000
37	RTV	C4059900	C4059900	C4059900	C4059900	C4059900	C4059900	C4059900
38	Flue Outlet Kit	C4221000	C4221000	C4221000	C4221000	C4221000	C4221000	C4221000
	Burner Group							
39	Main Burner	C4036500 (3)	C4036500 (4)	C4036500 (4)	C4036500 (5)	C4036500 (5)	C4036500 (6)	C4036500 (7)
40	Manifold	C400111	C400112	C400112	C400113	C400113	N/A	N/A
41	Main Burner Mount	N/A	N/A	N/A	N/A	N/A	N/A	N/A
42	Venturi Plate	C400682	N/A	N/A	N/A	N/A	N/A	C400685
43	Main Burner Orifices, Natural Gas	N/A	N/A	N/A	N/A	N/A	N/A	N/A
43	Main Burner Orifices, L.P. Gas	N/A	N/A	N/A	N/A	N/A	N/A	N/A
	Casing Group							
44	Casing	N/A	N/A	N/A	N/A	N/A	N/A	N/A
45	Radiation Shield Assembly	N/A	N/A	N/A	N/A	N/A	N/A	N/A
46	Blower Deck Assembly	N/A	N/A	N/A	N/A	N/A	N/A	N/A
47	Blower Deck Baffle	N/A	N/A	N/A	N/A	N/A	N/A	N/A
48	Door Channel	N/A	N/A	N/A	N/A	N/A	N/A	N/A
49	Top Panel Assembly	N/A	N/A	N/A	N/A	N/A	N/A	N/A
50	Top Panel Gasket (*2 Required*)	N/A	N/A	N/A	N/A	N/A	N/A	N/A
51	Top Panel Gasket	N/A	N/A	N/A	N/A	N/A	N/A	N/A

	NUP Series - High Efficiency Upflow Gas-Fired Furnace (Consolidated)							
		54000	72000	72000	90000	90000	108000	126000
Ref #	**Description**	**NUP054N12**	**NUP072N12**	**NUP072N16**	**NUP090N12**	**NUP090N16**	**NUP108N20**	**NUP126N20**
		1/3 hp	1/2 hp	3/4 hp	1/2 hp	3/4 hp	3/4 hp	3/4 hp
	Consolidated Reference No.	054-3	072-3	072-4	090-3	090-4	108-5	126-5
52	Restrictor Plate Assembly	N/A	C421801	C421801	N/A	N/A	N/A	N/A
53	Top Panel Gasket	C421780	C421780	C421780	C421780	C421780	N/A	N/A
54	Air Inlet Collar	C421770	C421770	C421770	C421770	C421770	N/A	N/A
55	Base Panel	N/A	N/A	N/A	N/A	N/A	N/A	N/A
56	Base Support	N/A	N/A	N/A	N/A	N/A	N/A	N/A
57	Hem Gaskets	N/A	N/A	N/A	N/A	N/A	N/A	N/A
58	Door Gaskets	N/A	N/A	N/A	N/A	N/A	N/A	N/A
59	Duct Flange	N/A	N/A	N/A	N/A	N/A	N/A	N/A
60	S-Lock	N/A	N/A	N/A	N/A	N/A	N/A	N/A
61	Burner Access Panel Assembly	C422230	C422230	N/A	C422230	N/A	N/A	N/A
62	Burner Access Panel View Port	N/A	N/A	N/A	N/A	N/A	N/A	N/A
63	Burner Access Panel Gasket, (*2 Required*)	N/A	N/A	N/A	N/A	N/A	N/A	N/A
64	Burner Access Panel Gasket	N/A	N/A	N/A	N/A	N/A	N/A	N/A
65	Burner Enclosure Base	N/A	N/A	N/A	N/A	N/A	N/A	N/A
66	Burner Enclosure Base Gasket	N/A	N/A	N/A	N/A	N/A	N/A	N/A
67	Gas Entry Grommet	N/A	N/A	N/A	N/A	N/A	N/A	N/A
68	Blower Door	N/A	N/A	N/A	N/A	N/A	N/A	N/A
69	Outer Door	C4224900	C4224900	N/A	C4224900	N/A	N/A	N/A
	Condensate Group							
70	Trap Assembly	C4223700	C4223700	C4223700	C4223700	C4223700	C4223700	C4223700
71	Hose - Trap to Inducer Pan	N/A	N/A	N/A	N/A	N/A	N/A	N/A
72	Hose - Trap to Inducer Housing	N/A	N/A	N/A	N/A	N/A	N/A	N/A
73	Hose - Vent to Inducer Pan	N/A	N/A	N/A	N/A	N/A	N/A	N/A
	Accessory Group (not shown)							
74	Bottom Closure (1)	N/A	N/A	N/A	N/A	N/A	N/A	N/A
74	Bottom Closures (10)	C4045901	C4045901	C4045902	C4045901	C4045902	C4045903	C4045903
75	Filters, (10), 16 x 25 x 1	N/A	N/A	N/A	N/A	N/A	N/A	N/A
76	Filters, (10), 20 x 25 x 1	n/a	n/a	N/A	n/a	N/A	N/A	N/A
77	Bottom Filter Box	C4046601	C4046601	C4046602	C4046601	C4046602	C4046603	C4046603
78	Side Filter Cabinet	N/A	N/A	N/A	N/A	N/A	N/A	N/A
79	L.P. Conversion Kit, below 6000 Feet	C4222400	C4222400	C4222400	C4222400	C4222400	C4222400	C4222400
80	L.P. Conversion Kit, above 6000 Feet (U.S. Only)	N/A	N/A	N/A	N/A	N/A	N/A	N/A

	NUP Series - High Efficiency Upflow Gas-Fired Furnace (Consolidated)							
		54000	72000	72000	90000	90000	108000	126000
Ref #	**Description**	**NUP054N12**	**NUP072N12**	**NUP072N16**	**NUP090N12**	**NUP090N16**	**NUP108N20**	**NUP126N20**
		1/3 hp	1/2 hp	3/4 hp	1/2 hp	3/4 hp	3/4 hp	3/4 hp
	Consolidated Reference No.	054-3	072-3	072-4	090-3	090-4	108-5	126-5
81	Nat. Gas Conversion Kit, below 6000 Feet	C4223000	C4223000	C4223000	C4223000	C4223000	C4223000	C4223000
82	Nat. Gas Conversion Kit, above 6000 Feet (U.S. Only)	N/A	N/A	N/A	N/A	N/A	N/A	N/A
83	California NOx Screen (*order one for each burner*)	N/A	N/A	N/A	N/A	N/A	N/A	N/A
84	2" Concentric Vent	C4247600	C4247600	C4247600	n/a	n/a	n/a	n/a
85	3" Concentric Vent	n/a	C4247601	C4247601	C4247601	C4247601	C4247601	n/a
86	Touch-Up Paint Kit - Gray	N/A	N/A	N/A	N/A	N/A	N/A	N/A
87	Twinning Kit	C4254500	C4254500	C4254500	C4254500	C4254500	C4254500	C4254500

NUP Series - High Efficiency Upflow Gas-Fired Furnace (Consolidated)

Specifications

Model Number	Input	Output	AFUE	Motor HP	Blower Size	Temp Rise	Motor FLA	Motor Speed	Cooling @ .5 WC	CFM vs External Static Pressure .1	.2	.3	.4	.5	.6
NUP054N12	54,000	49,300	90.9	1/3	10-6	35-65	6.4	HI	3.0	1417	1361	1296	1222	1140	1057
								MH	2.5	1260	1230	1173	1110	1042	952
								ML	2.0	875	879	868	845	805	744
								LO	1.5	610	625	629	620	594	556
NUP072N12	72,000	65,700	90.9	1/2	10-8	35-65	7.8	HI	3.0	1614	1546	1463	1386	1299	1215
								MH	3.0	1614	1546	1463	1386	1299	1215
								ML	2.5	1309	1271	1226	1168	1091	1026
								LO	2.0	1031	1018	989	948	902	843
NUP090N12	72,000	65,700	90.9	3/4	Dual 10-4	30-60	7.4	HI	4.0	1937	1843	1737	1630	1507	1379
								MH	3.5	1722	1640	1550	1457	1353	1201
								ML	3.0	1559	1501	1425	1347	1248	1115
								LO	2.5	1364	1334	1275	1206	1126	1016
NUP072N16	90,000	82,100	90.9	1/2	10-8	40-70	8.0	HI	3.0	1632	1562	1491	1400	1316	1225
								MH	3.0	1632	1562	1491	1400	1316	1225
								ML	2.5	1331	1291	1254	1182	1118	1041
								LO	2.0	1044	1029	985	960	917	864
NUP090N16	90,000	82,100	90.9	3/4	Dual 10-4	35-65	7.8	HI	4.0	2019	1971	1888	1789	1683	1494
								MH	3.5	1758	1692	1618	1533	1416	1251
								ML	3.0	1549	1496	1440	1369	1251	1123
								LO	2.5	1342	1294	1249	1188	1120	1008
NUP108N20	108,000	98,600	90.9	3/4	Dual 10-6	35-65	8.3	HI	5.0	2260	2167	2060	1931	1807	1683
								MH	5.0	2260	2167	2060	1931	1807	1683
								ML	4.0	2024	1942	1845	1736	1621	1484
								LO	3.5	1628	1576	1521	1437	1343	1233
NUP126N20	126,000	115,000	90.9	3/4	Dual 10-6	45-75	9.5	HI	5.0	2314	2219	2084	1963	1827	1684
								MH	5.0	2314	2219	2084	1963	1827	1684
								ML	4.0	2024	1938	1833	1709	1603	1478
								LO	3.5	1595	1541	1481	1412	1333	1226

Dimensions

Model Number	Input	Airflow	Depth	Width	Height	Shipping Wt.	Vent Size	Air Openings Return	Air Openings Supply
NUP054N12	54,000	3 tons	28 13/16	17 1/2	39 5/8	122	2	15 3/4	15 15/16
NUP072N12	72,000	3 tons	28 13/16	17 1/2	39 5/8	131	2 or 3	15 3/4	15 15/16
NUP090N12	90,000	3 tons	28 13/16	17 1/2	39 5/8	145	2 or 3	15 3/4	15 15/16
NUP072N16	72,000	4 tons	28 13/16	20 1/2	39 5/8	141	2 or 3	18 3/4	18 15/16
NUP090N16	90,000	4 tons	28 13/16	20 1/2	39 5/8	150	2 or 3	18 3/4	18 15/16
NUP108N20	108,000	5 tons	28 13/16	23 1/2	39 5/8	174	3	21 3/4	21 15/16
NUP126N20	126,000	5 tons	28 13/16	23 1/2	39 5/8	193	3	21 3/4	21 15/16