HDS(M) Series - High Efficiency, Condensing Gas Furnace

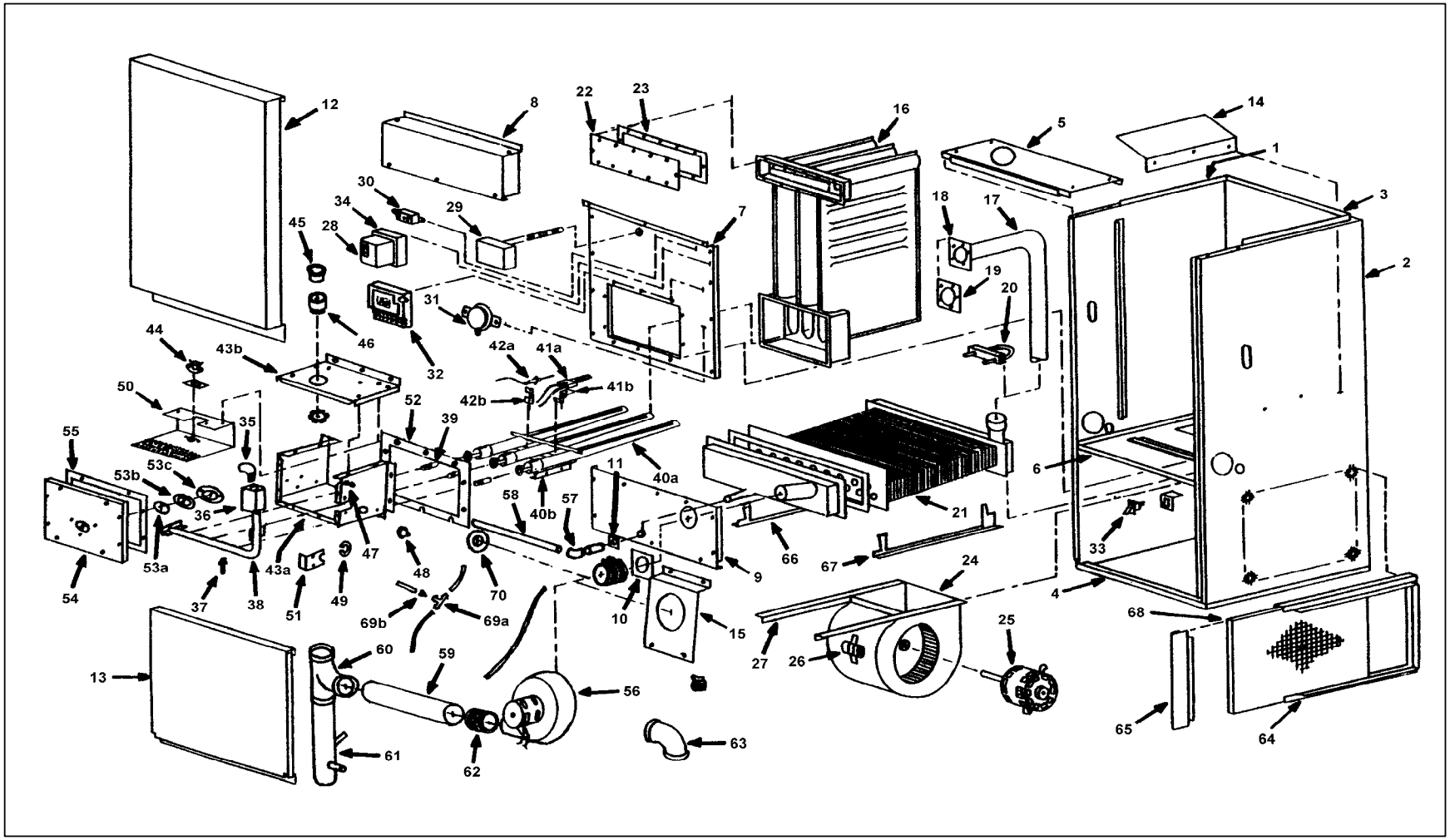

	HDS(M) Series - High Efficiency, Condensing Gas Furnace			
Key No.	**Description**	**40, 50, 60**	**60, 70, 80, 90**	**90, 100, 110, 120**
	Sheet Metal Group			
1	Panel, Left Side	N/A	N/A	N/A
2	Panel, Right Side	N/A	N/A	N/A
3	Panel, Rear	N/A	N/A	N/A
4	Panel, Base	N/A	N/A	N/A
5	Panel, Top	N/A	N/A	N/A
6	Panel, Blower Division	N/A	N/A	N/A
7	Panel, Inner Front	N/A	N/A	N/A
8	Panel, Flue Box Access	N/A	N/A	N/A
9	Panel, Coil Access	N/A	N/A	N/A
10	Gasket, Chute Tube	17918	17918	17918
11	Gasket, Drain Tube	17921	17921	17921
12	Panel, Upper Front Door	N/A	N/A	N/A
13	Panel, Blower Door	N/A	N/A	N/A
14	Baffle, Right Side	N/A	N/A	N/A
15	Bracket, Induced Blower Support	N/A	N/A	N/A
	Heat Exchanger Group			
16	Heat Exchanger, Primary (*does not include gaskets*)	N/A	N/A	N/A
17	Heat Exchanger, Secondary Tube	N/A	N/A	N/A
18	Flange, Flue Pipe	N/A	N/A	N/A
19	Gasket, Flange Mounting	17938	17938	17938
20	Muffler Clamp, MC 4200FA, 2"	N/A	N/A	N/A
21	Recovery Coil, Complete, (*includes front manifold cover*)	N/A	N/A	N/A
	(aka secondary H.E.)			
22	Cover, Flue Box	N/A	N/A	N/A
23	Gasket, Flue Box Cover	18178	18178	N/A
	Front Manifold Cover, Recovery Coil	21833	21833	21833
	Gasket, Front Manifold Cover, Recovery Coil	17916	17916	17916
	Blower Group			
	Blower Assembly, Complete	N/A	N/A	N/A
24	Blower, c/w Wheel, Morrison 100-10T DD	30626	30626	-
	Blower, c/w Wheel, Airdex DCT1220-1104 Special	-	-	27172
	Blower wheel (only), CM1020-1020 (10-10)	26430	26430	-
	Blower wheel (only), 12-11 DD, Morrison 03-66223	-	-	26653
25	Motor, 1/2 hp, 4-speed, PSC, Direct Drive, G.E. 5KCP39LGY723BS	102000131	102000131	-
	Alternate: 1/2 HP Motor Replacement Kit W/ Hardware, (No Capacitor)	27836	27836	- - -
	Alternate: 1/2 HP Motor Replacement Kit W/ Capacitor, (No Hardware)	550001530	550001530	- - -
	Motor, 3/4 hp, 4-speed, PSC, Direct Drive, G.E. 5KCP39RGU691AS	-	-	102000132
	Alternate: 3/4 HP Motor Replacement Kit W/ Capacitor, (No Hardware)	- - -	- - -	550001531
	Motor Mounting Band, TR5868	17811	17811	17811
	Motor Mounting Arm, TR6884B	26251	26251	-
	Motor Mounting Arm, TR6169B	-	-	17812
26	Capacitor, 10 mfd @ 370 Vac	27743	27743	-
	Capacitor, 20 mfd @ 370 Vac	-	-	27745
	Capacitor Insulator	27769	27769	N/A
	Capacitor Strap	27760	27760	27761
27	Rail, (*Blower Slide Rail*), 2 required	N/A	20964	17713
	Electrical & Control Group			
	Units manufactured prior to 05/30/1994			
28	Fan Center, 1-1611760-057-01	27740	27740	27740
	Replacement Relay for Fan Center, 9400-04Q1999	27767	27767	27767
29	Controller, Fan/Limit, L6064A, 11½", 230°F, HDS-90/80	-	18002	-

	HDS(M) Series - High Efficiency, Condensing Gas Furnace			
Key No.	**Description**	**40, 50, 60**	**60, 70, 80, 90**	**90, 100, 110, 120**
29	Controller, Fan/Limit, L6064A, 11½", 210°F, HDS-70/60	-	18121	-
30	Relay, Induced Blower, 9400-11Q 1611751-9	27739	27739	27739
32	Control, Ignition, W-R **50E47-843** (*for use with* Norton 201W, P/N 20834)	20837	20837	20837
	Units manufactured on or after 05/30/1994			
	Transformer, 120/24vac, 40 VA, BE161640REK0028	550001339	550001339	550001339
	Limit Switch, 240°F, 36T01B7, L240F, 42344, 7" Insertion	21992	21992	21992
	Gasket, Limit Control	26762	26762	26762
32	Control, Integrated, W-R **50A55-843** (*for use with* Norton 271W, P/N 26789S)	27492	27492	27492
31	Pressure Switch, FS6116-764, -0.25" w.c.	20829	20829	-
31	Pressure Switch, X08154, -0.55" w.c.	-	-	27191
	Wire Harness, 24", F115-0100-00	N/A	N/A	N/A
	Wire Harness, Complete, (*4-Prong, used by ID Bower*)	N/A	N/A	N/A
33	Switch, Blower Door	19172	19172	19172
	Bracket, Blower Door Switch	18932	18932	18932
34	Junction Box	21318	21318	21318
	Junction Box Cover	3011160A	3011160A	3011160A
	Burner Group			
35	1/2 x 1/2 BMI 90° Street Elbow	N/A	N/A	N/A
36	Gas Valve, Natural Gas, VR8205A2008B	26180	26180	-
36	Gas Valve, L.P. Gas, VR8205A2016B	26181	26181	-
36	Gas Valve, Natural Gas, VR8205C2048B - Step	-	-	27163
36	Gas Valve, L.P. Gas, VR8205C2030B - Step	-	-	N/A
37	Adapter, 1/8" NPT to Barbed, Straight, HW 392877	N/A	N/A	N/A
38	Manifold Assembly	N/A	N/A	N/A
39	Burner Orifice, Natural Gas, HDS-40MS, No. 44 DMS, (2)	3051099B	-	-
39	Burner Orifice, Natural Gas, HDS-50MS, No. 41 DMS, (2)	10357	-	-
39	Burner Orifice, Natural Gas, HDS-60MS, No. 38 DMS, (2)	3051100B	-	-
39	Burner Orifice, Natural Gas, HDS-60M, No. 44 DMS, (3)	-	3051099B	-
39	Burner Orifice, Natural Gas, HDS-70M, No. 43 DMS, (3)	-	3051094B	-
39	Burner Orifice, Natural Gas, HDS-80M, No. 40 DMS, (3)	-	3051097B	-
39	Burner Orifice, Natural Gas, HDS-90M, No. 37 DMS, (3)	-	N/A	-
39	Burner Orifice, Natural Gas, HDS-90MF, No. 44 DMS, (4)	-	-	3051099B
39	Burner Orifice, Natural Gas, HDS-100MF, No. 43 DMS, (4)	-	-	3051094B
39	Burner Orifice, Natural Gas, HDS-110MF, No. 40 DMS, (4)	-	-	3051097B
39	Burner Orifice, Natural Gas, HDS-120MF, No. 38 DMS, (4)	-	-	3051100B
39	Burner Orifice, L.P. Gas, HDS-40MS, 1.32mm, (2)	N/A	-	-
39	Burner Orifice, L.P. Gas, HDS-50MS, 1.40mm, (2)	N/A	-	-
39	Burner Orifice, L.P. Gas, HDS-60MS, 1.61mm, (2)	N/A	-	-
39	Burner Orifice, L.P. Gas, HDS-60M, 1.32mm, (3)	-	N/A	-
39	Burner Orifice, L.P. Gas, HDS-70M, 1.40mm, (3)	-	N/A	-
39	Burner Orifice, L.P. Gas, HDS-80M, 1.53mm, (3)	-	N/A	-
39	Burner Orifice, L.P. Gas, HDS-90M, 1.61mm, (3)	-	N/A	-
39	Burner Orifice, L.P. Gas, HDS-90MF, 1.32mm, (4)	-	-	N/A
39	Burner Orifice, L.P. Gas, HDS-100MF, 1.40mm, (4)	-	-	N/A
39	Burner Orifice, L.P. Gas, HDS-110MF, 1.53mm, (4)	-	-	N/A
39	Burner Orifice, L.P. Gas, HDS-120MF, 1.61mm, (4)	-	-	N/A
40a	Burner Assembly, BSI Ribbon Burner	16725	10741	16726
40b	Burner Retainer, BSI Burner	N/A	N/A	N/A
41a	Ignitor, Norton, 201W c/w 12" Lead (45 sec. warm-up)	20834	20834	20834
41a	Ignitor, Norton, 271W c/w 12" Lead (17 sec. warm-up)	26789S	26789S	26789S
41b	Bracket, Ignitor	N/A	N/A	N/A

	HDS(M) Series - High Efficiency, Condensing Gas Furnace			
Key No.	**Description**	**40, 50, 60**	**60, 70, 80, 90**	**90, 100, 110, 120**
42a	Flame Sensor, Straight, Honeywell 272789	26878	26878	26878
42b	Bracket, Flame Sensor, (*included with flame sensor*)	21757	21757	21757
43a	Combustion Box Bottom	N/A	N/A	N/A
43b	Combustion Box Top	N/A	N/A	N/A
44	Switch, Flame Limit (roll-out), 36TR16-6031, 350°F	19292	19292	19292
	Gasket, Flame Limit (Therm-O-Disc)	N/A	N/A	N/A
45	Reducer Bushing, 2-½ x 2"	N/A	N/A	-
46	Connector, Intake Air	N/A	N/A	N/A
	Locking Nut, 2"	N/A	N/A	-
47	Adapter, 1/8" NPT to Hose, Straight, MIF425	N/A	N/A	N/A
	Nut, Plastic, HN 1/4-28	20952	20952	20952
48	Grommet, Wire, 5436-26012	N/A	N/A	N/A
49	Grommet, Manifold Pipe	N/A	N/A	N/A
50	Combustion Box Baffle	N/A	N/A	N/A
51	Cover Plate Manifold Grommet	N/A	N/A	N/A
52	Combustion Box Gasket	N/A	N/A	N/A
	Combustion Box Access Cover Assembly	N/A	N/A	N/A
	includes:			
53a	Sight Glass	N/A	N/A	N/A
53b	Sight Gasket	N/A	N/A	N/A
53c	Sight Glass Retainer	N/A	N/A	N/A
54	Combustion Box Access Cover	N/A	N/A	N/A
55	Access Cover Gasket	N/A	N/A	N/A
	Flue Collection Group			
56	Kit, Induced Blower Assembly	N/A	N/A	N/A
56	Kit, Induced Blower, Reverse Discharge	-	N/A	-
	1/2 x 1/2 CPVC 90° Elbow	N/A	N/A	N/A
57	1/2 x 1/2 CPVC 90° Street Elbow	30627	30627	30627
58	1/2 x 12" CPVC Pipe	N/A	N/A	N/A
59	2" x 15" PVC Pipe	N/A	N/A	N/A
60	2" Tee-Wye, PVC	N/A	N/A	N/A
61	Drain Trap Assembly, (Drip Leg) *less drain plug. See document No. 615000036*	N/A	N/A	N/A
	Drain Plug, 1/2" NPT c/w Gasket	21218	21218	21218
62	Coupling, Rubber, 2" x 2"	27607	27607	27607
	Gear Clamp, 9/16" - 2" O.D.	27608	27608	27608
63	Vent Terminal, 2" x 2" PVC 45°Elbow c/w Screen	N/A	N/A	-
63	Vent Terminal, 3" x 3" PVC 45°Elbow	-	-	N/A
	Terminal, Combustion Air, 3" x 3" PVC 90° Elbow	N/A	N/A	N/A
	Reducer Bushing, 3" x 2" PVC	N/A	N/A	-
	Vent Screen, 2", Plastic (*bird screen*)	20249	20249	-
	Vent Screen, 3", Stainless Steel (*bird screen*)	N/A	N/A	N/A
	Drain Tube, Plastic, 5/8" I.D., 7/8" O.D. KO10-1014	1140149	1140149	1140149
	Gear Clamp, 9/16" - 1", HS8-150	N/A	N/A	N/A
	Miscellaneous Group			
64	Filter Frame, 16 x 25	18020	18020	-
64	Filter Frame, 18 x 25	-	-	N/A
65	Filter Frame End Support, 16"	5592B2	5592B2	-
65	Filter Frame End Support, 18"	-	-	N/A
66	Support Leg, Recovery Coil, Left	N/A	N/A	N/A
67	Support Leg, Recovery Coil, Right	N/A	N/A	N/A
	Tubing, 3/16", 600-612041, Gray (*for pressure switches*)	21195	21195	21195
68	Air filter, 16 x 25 x 1, Permanent	2180023	2180023	-
68	Air filter, 18 x 25 x 1, Permanent	-	-	N/A

	HDS(M) Series - High Efficiency, Condensing Gas Furnace			
Key No.	**Description**	**40, 50, 60**	**60, 70, 80, 90**	**90, 100, 110, 120**
69	Tee, 1/8", Plastic, T44	N/A	N/A	N/A
69b	Orifice, Red, (fits in T44 tee)	N/A	N/A	N/A
	Gear Clamp, 5/16" - 3/4"	N/A	N/A	N/A
	Bushing, SB875-11	2161060	2161060	2161060
	End Cap, 242-2	N/A	N/A	N/A
	Plug, Sheet Metal, BFP 3.5	N/A	N/A	N/A
	Gasket, Front Manifold Cover (*recovery coil*)	17916	17916	17916
	Front Manifold Cover, Plastic (*recovery coil*)	21833	21833	21833
70	Chute Orifice, HDS-40MS, 3/4" I.D.	N/A	-	-
70	Chute Orifice, HDS-50MS, 7/8" I.D.	N/A	-	-
70	Chute Orifice, HDS-60MS, 7/8" I.D.	N/A	-	-
70	Chute Orifice, HDS-60M, 15/16" I.D.	-	N/A	-
70	Chute Orifice, HDS-70M, 15/16" I.D.	-	N/A	-
70	Chute Orifice, HDS-80M, 1-1/2" I.D.	-	N/A	-
70	Chute Orifice, HDS-90M, 1-1/2" I.D.	-	N/A	-
70	Chute Orifice, HDS-90MF, 1-1/8" I.D.	-	-	N/A
70	Chute Orifice, HDS-100MF, 1-1/8" I.D.	-	-	N/A
70	Chute Orifice, HDS-110MF, 1-1/2" I.D.	-	-	N/A
70	Chute Orifice, HDS-120MF, 1-1/2" I.D.	-	-	N/A
	Accessory Carton, Complete	N/A	N/A	N/A
	Kits			
	Conversion Kit, Natural Gas to L.P. Gas	00500020	00500020	20500021
	Conversion Kit, L.P. Gas to Natural Gas	N/A	N/A	N/A

HDS(M) Series - High Efficiency, Condensing Gas Furnace

Specifications

Natural Gas:

Model	Ratings BTU/HR				Main Blower	External Static Pressure			Cooling Capacity			AFUE
	0-2000'		0-4500'			Direct Drive			Tons	HP	MAX CFM	
	Input	Output	Input	Output		.20 W.C.	.50 W.C.	HP				
HDS 40MS	40,000	37,600	40,000	37,600	10-10T	M.HI	HIGH	1/2	2 - 3	1/2	1200	92.7
HDS 60/50MS	50,000	47,000	50,000	47,000	10-10T	M.HI	HIGH	1/2	2 - 3	1/2	1200	92.5
	60,000	56,400	N/A	N/A	10-10T		HIGH			1/2	1200	92.1
HDS 70/60M	60,000	56,400	60,000	56,400	10-10T	M.HI	HIGH	1/2	2 - 3	1/2	1200	92.7
	70,000	66,500	N/A	N/A	10-10T		HIGH			1/2	1200	92.7
HDS 90/80M	80,000	74,000	80,000	74,000	10-10T	M.HI	HIGH	1/2	2 - 3	1/2	1200	91.1
	90,000	84,000	N/A	N/A	10-10T		HIGH			1/2	1200	91.1
HDS 90/100MF	90,000	86,000	90,000	86,000	12-11T	M.HI	HIGH	3/4	2 - 5	3/4	1900	92.0
	100,000	95,000	N/A	N/A	12-11T		HIGH			3/4	1900	90.8
HDS110/120MF	110,000	104,000	110,000	104,000	12-11T	M.HI	HIGH	3/4	2 - 5	3/4	1900	90.0
	120,000	112,000	N/A	N/A	12-11T	HIGH	HIGH			3/4	1900	90.7

Propane Gas:

HDS 40MS	40,000	37,600	40,000	37,600	10-10T	M.HI	HIGH	1/2	2-3	1/2	1200	92.7
HDS 50MS	50,000	47,000	50,000	47,000	10-10T	M.HI	HIGH	1/2	2-3	1/2	1200	92.5
HDS 60MS	60,000	56,400	N/A	N/A	10-10T	M.HI	HIGH	1/2	2-3	1/2	1200	92.1
HDS 60M	60,000	56,400	60,000	56,400	10-10T	M.HI	HIGH	1/2	2-3	1/2	1200	92.7
HDS 70M	70,000	66,500	N/A	N/A	10-10T	M.HI	HIGH	1/2	2-3	1/2	1200	92.1
HDS 80M	80,000	74,800	80,000	74,800	10-10T	M.HI	HIGH	1/2	2-3	1/2	1200	91.1
HDS 90M	90,000	84,000	N/A	N/A	10-10T	M.HI	HIGH	1/2	2-3	1/2	1200	91.1
HDS 90MF	90,000	86,000	90,000	86,000	12-11T	M.HI	HIGH	3/4	2-5	3/4	1900	92.0
HDS 100MF	100,000	95,000	N/A	N/A	12-11T	M.HI	HIGH	3/4	2-5	3/4	1900	90.8
HDS 110MF	110,000	104,000	110,000	104,000	12-11T	M.HI	HIGH	3/4	2-5	3/4	1900	90.0
HDS 120MF	120,000	112,000	N/A	N/A	12-11T	HIGH	HIGH	3/4	2-5	3/4	1900	90.7

Dimensions

Model	Cabinet			Return Plenum (FxG)	Warm Air Plenum (ExD)	Air Filter	Vent Dia.	Clearances					Shipping WT. LBS.
	Width A	Depth B	HT. C					Top	Front	Sides	Back	Vent	
HDS 40-60-70-80-90MS/M	20-5/8	29-3/8	52	14 x 22	19-¼ x 19	16x25x1	2	1	6	1	0	0	260
HDS 90-100-110-120MF	21-5/8	29-1/4	56	16 x 22	20-½ x 20	18x25x1	3	1	6	1	0	0	260