HCS Series High Efficiency Condensing Gas Furnace - UltraMax (Original)

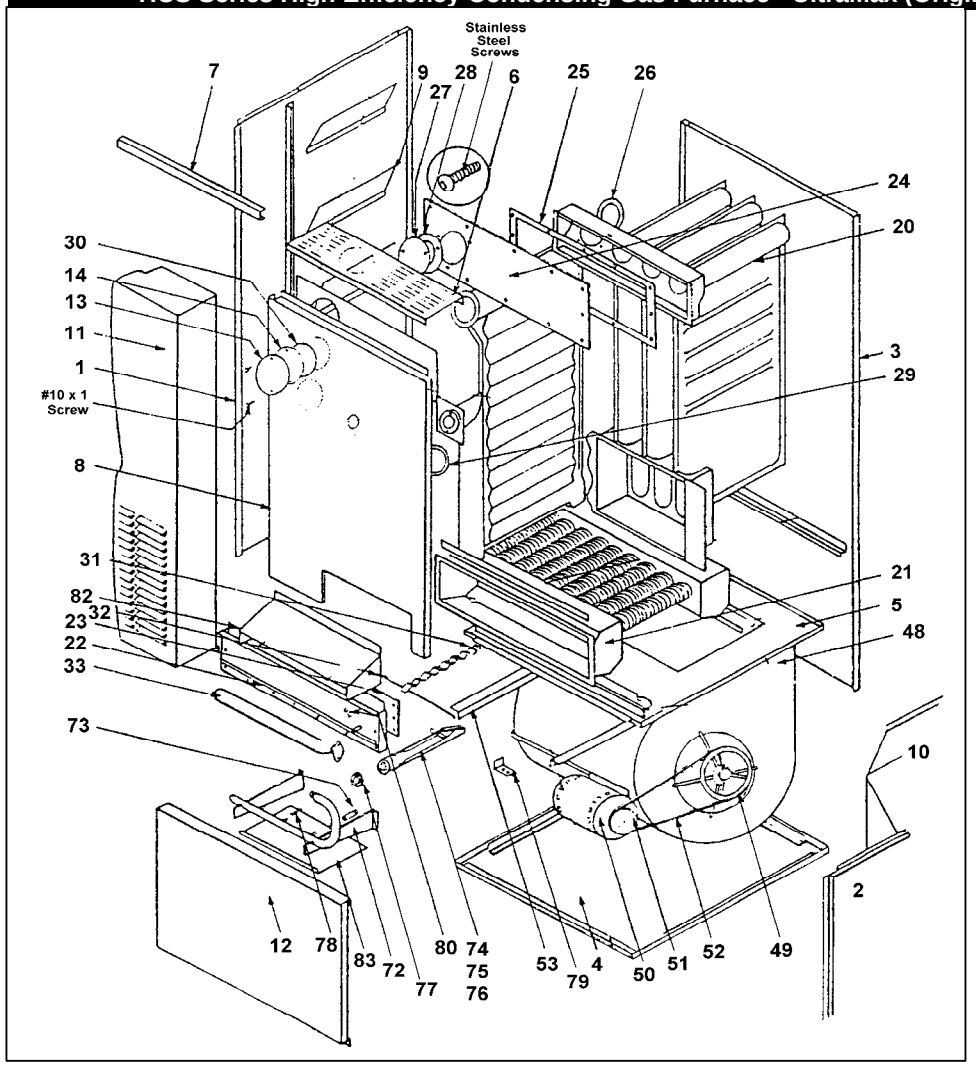

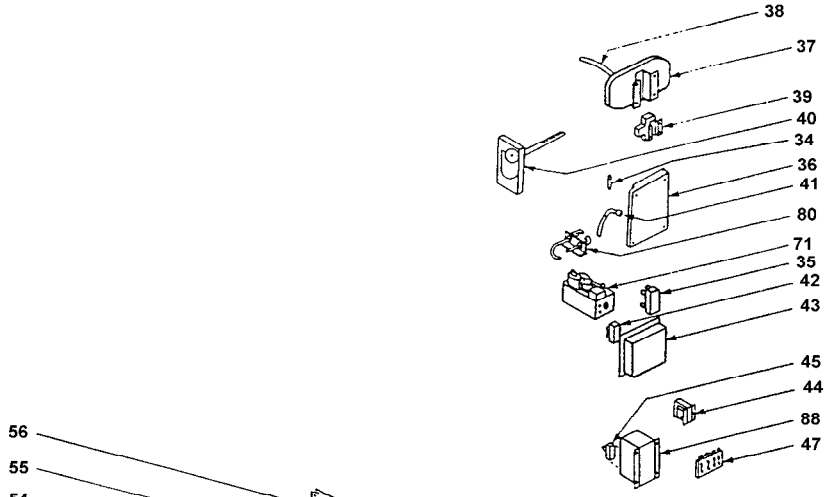

CONTROLS

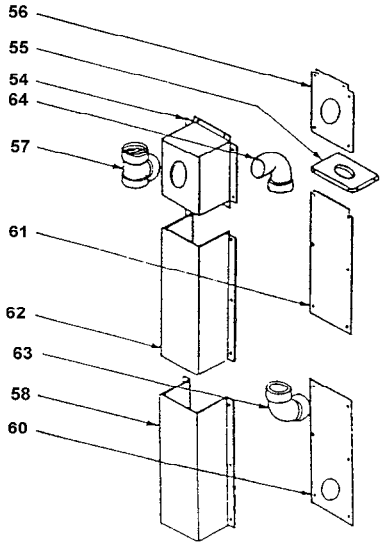

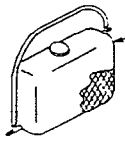

NEUTRALIZER

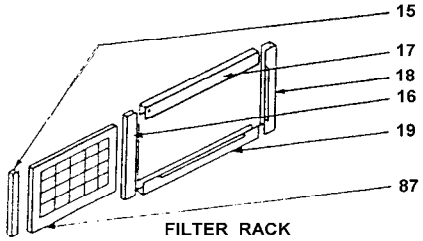

FILTER RACK ASSEMBLY

	HCS Series High Efficiency Condensing Gas Furnace - UltraMax (Original)			
Key No.	**Description**	**40, 50, 60**	**60, 70, 80, 90 70/60, 90/80**	**120,120/110**
	Sheet Metal Group			*(No Diagram)*
1	Panel, Left Side	N/A	N/A	N/A
2	Panel, Right Side	N/A	N/A	N/A
3	Panel, Rear	N/A	N/A	N/A
4	Panel, Base	N/A	N/A	N/A
5	Panel, Blower Division	N/A	N/A	N/A
6	Panel, Top	N/A	N/A	N/A
7	Channel, Door Hanger	N/A	N/A	N/A
8	Panel, Inner Front	N/A	N/A	- - -
	Panel, Inner Front, Lower	- - -	- - -	N/A
	Panel, Inner Front, Middle	- - -	- - -	N/A
9	Baffle, Air Baffle, Left Side	N/A	N/A	- - -
10	Baffle, Air Baffle, Right Side	N/A	N/A	N/A
11	Panel, Upper Door	N/A	N/A	N/A
12	Panel, Blower Door	N/A	N/A	N/A
13	Inner Front Clean-Out Cover	N/A	N/A	- - -
14	Inner Front Clean-Out Cover Gasket	N/A	N/A	- - -
15	Filter Rack Cap	- - -	N/A	N/A
16	Filter Frame, Rear	- - -	5592B2	5592B2
17	Filter Frame, Top (as shown)	- - -	N/A	N/A
18	Filter Frame, Front	- - -	N/A	N/A
19	Filter Frame, Bottom (as shown)	- - -	N/A	N/A
15	Filter Frame	18020	- - -	- - -
18	Filter Frame Support End	N/A	- - -	- - -
	Heat Exchanger Group			
20	Heat Exchanger, Primary	N/A	N/A	N/A
21	Heat Exchanger, Secondary (*kit*)	N/A	N/A	N/A
22	Manifold Cover (*original tertiary*)	N/A	N/A	N/A
	Manifold Cover (*21293 replacement recovery coil*)	N/A	N/A	- - -
23	Manifold Cover Gasket (*original tertiary*)	N/A	N/A	- - -
	Manifold Cover Gasket (*21293 replacement recovery coil*)	N/A	N/A	- - -
24	Flue Box Cover	N/A	N/A	N/A
25	Flue Box Gasket	N/A	N/A	N/A
26	Flue Box Flange Gasket	N/A	N/A	17938
27	Flue Box Clean Out Cover	N/A	N/A	N/A
28	Flue Box Clean Out Cover Gasket	N/A	N/A	- - -
29	Chute Gasket	N/A	N/A	- - -
30	Knock Out Gasket	N/A	N/A	- - -
31	Fin Tube Baffle (*turbulator*)	N/A	N/A	- - -
32	Turbulator Retainer Wire	N/A	N/A	- - -
	Electrical & Control Group			
33	Switch, Flame Limit (*flame roll-out*)	2012036	2012036	2012036
34	Fuse, Control Circuit, 1-3/4 amp	N/A	N/A	- - -
35	Fuse Block	N/A	N/A	- - -
36	Ignition Control:			
	Honeywell System: Honeywell S8610U3009	21454	21454	21454
	Robertshaw System: SP735P or SP745PU	N/A	N/A	N/A
37	Pressure Switch:			
	HCS 2-Section 40: -0.30" w.c. (*FS6013-3107*)	N/A	- - -	- - -
	HCS 2-Section 60/50: -0.95" w.c. (*FS6013*)	N/A	- - -	- - -
	HCS 2-Section 60A: -0.40" w.c. (*FS6013-125*)	18574	- - -	- - -
	HCS 3-Section 60, 70, 70/60: -0.50" w.c. (*FS6013-447*)	- - -	18682	- - -
	HCS 3-Section 80, 90, 90/80: -0.70" w.c. (*FS6013-447*)	- - -	18682	- - -

	HCS Series High Efficiency Condensing Gas Furnace - UltraMax (Original)			
Key No.	**Description**	**40, 50, 60**	**60, 70, 80, 90 70/60, 90/80**	**120,120/110**
	HCS 4-Section 120, 120/110: -1.05" w.c. (*FS6013-3109*)	- - -	- - -	18003
38	Pressure Switch Tube, *3/8" ID x 9/16" OD, 38" Long*	N/A	N/A	N/A
39	Relay, Induced Blower, SPST, 24v coil	27739	27739	27739
	Relay, Blower, SPDT, 24v Coil (U.S. Models)	27767	27767	27767
40	Fan / Limit Switch, L4064B2723B, Limit set at 250°F	21482	21482	- - -
40	Fan / Limit Switch, L4064B2723B, Limit set at 230°F	- - -	- - -	18002
41	Ignition Cable (Honeywell System) (*Raj connectors, both ends*)	18893	18893	18893
	Ignition Cable (*Raj connector x 1/4" Quick-Connect*)	21455	21455	21455
	Adaptor, Raj connector to 1/4-inch Quick-Connect	N/A	N/A	N/A
42	Switch, Low Speed By-Pass, SPST	20693	20693	- - -
43	Junction Box	21318	21318	21318
	Junction Box Cover	N/A	N/A	3011160A
44	Transformer, 40va	550001339	550001339	550001339
45	Door Switch, (*Original, 2609-1010, SPST*)	N/A	N/A	N/A
46	Door Switch Box, (*For use with 2202000A*)	N/A	N/A	N/A
45	Door Switch, SPST, TA22BTLB	19172	19172	19172
46	Door Switch Bracket, (*For use with 19172*)	18932	18932	18932
47	Terminal Block, Low Voltage, 2 Post, 2-141 (*Thermostat*)	N/A	N/A	N/A
	Terminal Block, Low Voltage, 5 Post (*A/C Ready Models*)	N/A	N/A	N/A
	Blower Group, Belt Drive			
48	Blower Fan c/w Wheel, G10 Special, Morrison 100-10R BD, 05-25544	2041005	2041005	- - -
	Blower Wheel	26589	26589	- - -
49	Blower Pulley, 6 x ¾	2240006	2240006	- - -
50	Blower Motor, Belt Drive			
	Motor, 1/3 hp, Single-Speed	102000153	102000153	- - -
	Motor, 1/3 hp, 2-Speed	N/A	N/A	- - -
	Motor, 1/2 hp, Single-Speed	102000154	102000154	- - -
	Motor, 1/2 hp, 2-Speed	28008	28008	- - -
51	Motor Pulley, 3¼ x ½ Variable Speed	2240001	2240001	- - -
52	Blower Fan Belt			
	4L350, 35-inches	2240065	2240065	- - -
	4L360, 36-inches	2240015	2240015	- - -
	4L370, 37-inches	2240016	2240016	- - -
	4L380, 38-inches	2240017	2240017	- - -
53	Blower Slide Rail	N/A	N/A	- - -
	Blower Bearing Bracket, *G10, 6080003*	28210	28210	- - -
	Blower Bearing Rubber Sleeve, *8860019 #16-3/4*	12982	12982	- - -
	Blower Bearing, Sleeve Type, *Delhi, 8100013 #8x3/4*	2040036	2040036	- - -
	Blower Bearing, Ball Bearing Type, *RCRx3/4 (Optional)*	2041046	2041046	- - -
	Blower Shaft, G10, *2100009, 16-5/8"*	2041042	2041042	- - -
	Blower Group, Direct Drive			
	Blower Fan c/w Wheel, 100-10R DD, Morrison	- - -	550001535	- - -
	Blower Fan c/w Wheel, DCT1220-1104 Special	- - -	- - -	27172
	Blower Wheel, CM1020-1020	- - -	26430	- - -
	Blower Wheel, CM1220-1104	- - -	- - -	26653
	Blower Motor, PSC, 1/2 hp, 4-Speed	- - -	102000131	- - -
	Blower Motor, PSC, 1/2 hp, 4-Speed, GE 5KCP39LGY723BS	- - -	102000131	- - -
	Blower Motor Replacement Kit, 1/2 HP W/ Hardware	- - -	27836	- - -
	Blower Motor Replacement Kit, 1/2 HP W/ Capacitor	- - -	550001530	- - -
	Blower Motor, PSC, 3/4 hp, 4-Speed, GE 5KCP39RGU691AS	- - -	- - -	102000132
	Blower Motor Replacement Kit, 3/4 HP W/ Capacitor	- - -	- - -	550001531
	Motor Mounting Band, TR5868	- - -	17811	17811
	Motor Mounting Arms, TR6884B, *3 required*	- - -	26251	- - -

	HCS Series High Efficiency Condensing Gas Furnace - UltraMax (Original)			
Key No.	**Description**	**40, 50, 60**	**60, 70, 80, 90 70/60, 90/80**	**120,120/110**
	Motor Mounting Arms	- - -	- - -	17812
	Capacitor, 10mfd @370vac	- - -	27743	- - -
	Capacitor, 20mfd @370vac	- - -	- - -	27745
	Capacitor Insulator	- - -	N/A	N/A
	Capacitor Strap, N-24B	- - -	27760	- - -
	Capacitor Strap, N-32B	- - -	- - -	27761
	Blower Slide Rail, *2 required*	- - -	N/A	17713
	Venting & Drainage Group			
	Pkg.: Vent Terminal Assembly	N/A	N/A	N/A
54	Vent Terminal Casing	N/A	N/A	N/A
55	Vent Terminal Plate	N/A	N/A	N/A
56	Vent Terminal Back Plate	N/A	N/A	N/A
57	Terminal, Tee-Wye c/w Screens	N/A	N/A	N/A
	Top Vent Clamp	N/A	N/A	N/A
	Bottom Vent Clamp	N/A	N/A	N/A
	Parts Bag	N/A	N/A	N/A
	Pkg.: Vent Riser	N/A	N/A	N/A
56	Vent Terminal Back Plate	N/A	N/A	N/A
58	Vent Casing Extension	N/A	N/A	N/A
59	Vent Terminal Extension Plate	N/A	N/A	N/A
60	Vent Terminal Back Plate	N/A	N/A	N/A
61	Vent Terminal Back Plate Extention	N/A	N/A	N/A
62	Vent Terminal Casing Extention	N/A	N/A	N/A
63	2" x 2" 90 Elbow, PVC	N/A	N/A	N/A
64	2" x 2" 90 Street Elbow, PVC	N/A	N/A	N/A
	Top Vent Clamp	N/A	N/A	N/A
	Tee, 3/8"	N/A	- - -	- - -
65	Induced Blower Kit	N/A	N/A	N/A
66	Chute Orifice:			
	HCS-40, 2-section: 1/4"	N/A	- - -	- - -
	HCS-50, 2-section: 7/8"	N/A	- - -	- - -
	HCS-60, 2-section: 7/8"	N/A	- - -	- - -
	HCS-60, 3-section: 1-1/2"	- - -	N/A	- - -
	HCS-70, 3-section: 1-1/2"	- - -	N/A	- - -
	HCS-80, 3-section: No Chute Orifice	- - -	- - -	- - -
	HCS-90, 3-section: No Chute Orifice	- - -	- - -	- - -
	HCS-110, 4-section: 1-1/2"	- - -	- - -	N/A
	HCS-120, 4-section: 1-1/2"	- - -	- - -	N/A
67	2" Rubber Coupling, (*without gear clamps*)	27607	27607	27607
	Gear Clamp for above, *2 required*	27608	27608	27608
68	3" Rubber Coupling	N/A	N/A	N/A
69	Drain Seal (*Gasket - can use silicon*)	N/A	N/A	N/A
70	Neutralizer Kit	N/A	N/A	N/A
	5/8" I.D. 7/8" O.D. Drain Tube (/ft.)	1140149	1140149	1140149
	1/2"I.D. 11/16"O.D. Drain Tube	N/A	N/A	N/A
	5/16"I.D. 7/16"O.D. Drain Tube	1141005	1141005	1141005
	3/8"I.D. 9/16"O.D. Vinyl Tube	N/A	N/A	N/A
	Burner Group			
	Inshot Burners - Natural Gas Only			
71	Gas Valve, VR8204A2001	1570012	1570012	1570012
72	Burner Manifold Assembly	N/A	N/A	N/A
73	Burner Orifice, HCS-40, Cdn. Sea Level, No. 44 DMS (2)	3051099B	- - -	- - -
73	Burner Orifice, HCS-40, Cdn. High Altitude, No. 45 DMS (2)	N/A	- - -	- - -

HCS Series High Efficiency Condensing Gas Furnace - UltraMax (Original)				
Key No.	**Description**	**40, 50, 60**	**60, 70, 80, 90 70/60, 90/80**	**120,120/110**
73	Burner Orifice, HCS-40, U.S., No. 44 DMS (2)	3051099B	- - -	- - -
73	Burner Orifice, HCS-50, U.S., No. 42 DMS (2)	N/A	- - -	- - -
73	Burner Orifice, HCS-60/50, Cdn., Sea Level, No. 39 DMS (2)	3051096B	- - -	- - -
73	Burner Orifice, HCS-60/50, Cdn., High Altitude, No. 43 DMS	3051094B	- - -	- - -
73	Burner Orifice, HCS-60, U.S., No. 44 DMS (3)	- - -	3051084B	- - -
73	Burner Orifice, HCS-70, U.S., No. 43 DMS (3)	- - -	3051094B	- - -
73	Burner Orifice, HCS-70/60, Cdn. No. 44 DMS (3)	- - -	3051084B	- - -
73	Burner Orifice, HCS-80, U.S., No. 40 DMS (3)	- - -	3051097B	- - -
73	Burner Orifice, HCS-90, U.S., No. 38 DMS (3)	- - -	3051100B	- - -
73	Burner Orifice, HCS-90/80, Cdn. No. 39 DMS (3)	- - -	3051096B	- - -
73	Burner Orifice, HCS-110, U.S., No. 40 DMS (4)	- - -	- - -	N/A
73	Burner Orifice, HCS-120, U.S., No. 38 DMS (4)	- - -	- - -	3051100B
73	Burner Orifice, HCS-120/110, Cdn. No. 39 DMS (4)	- - -	- - -	3051096B
74	Inshot Burner Assembly, Left	N/A	N/A	N/A
75	Inshot Burner Assembly, Middle	- - -	N/A	N/A
76	Inshot Burner Assembly, Right	N/A	N/A	N/A
	Inshot to Ribbon Burner Conversion Kit	29235	N/A	N/A
77	Burner Air Shutter (*2 per burner required*)	N/A	N/A	N/A
78	Burner Air Shutter Spring	2160078	2160078	2160078
79	Pilot Bracket	3051010A	3051010A	3051010A
80	Pilot Burner Assembly, Q345A1024B	1380004	1380004	1380004
	Pilot Orifice BCR-18, H390686-4	21407	21407	21407
81	Pilot Tubing (/ft.)	1140146	1140146	1140146
82	Upper Heat Shield	N/A	N/A	N/A
83	Lower Heat Shield	N/A	N/A	N/A
	BSI Ribbon Burners - Natural Gas or Propane			
71	Gas Valve, Natural Gas, VR8204A2001 Honeywell	1570012	1570012	1570012
71	Gas Valve, L.P. Gas, VR8204A2043B Honeywell	18603	18603	18603
71	Gas Valve, Natural Gas, 7100DER Robertshaw	N/A	N/A	- - -
71	Gas Valve, L.P. Gas, 7100DER Robertshaw	N/A	N/A	- - -
72	Burner Manifold Assembly	N/A	N/A	N/A
	BSI Ribbon Burner Assembly	16725	10741	16726
73	NG Brnr Orifice, HCS-40, Cdn. Sea Level, No. 44 DMS (2)	3051099B	- - -	- - -
73	NG Brnr Orifice, HCS-40, Cdn. High Altitude, No. 45 DMS (2)	N/A	- - -	- - -
73	NG Brnr Orifice, HCS-40, U.S., No. 44 DMS (2)	3051099B	- - -	- - -
73	NG Brnr Orifice, HCS-50, U.S., No. 42 DMS (2)	N/A	- - -	- - -
73	NG Brnr Orifice, HCS-60/50, Cdn., S/L, No. 39 DMS (2)	3051096B	- - -	- - -
73	NG Brnr Orifice, HCS-60/50, Cdn., H/A, No. 43 DMS (2)	3051094B	- - -	- - -
73	NG Brnr Orifice, HCS-60, U.S., No. 44 DMS (3)	- - -	3051084B	- - -
73	NG Brnr Orifice, HCS-70, U.S., No. 43 DMS (3)	- - -	3051094B	- - -
73	NG Brnr Orifice, HCS-70/60, Cdn. No. 44 DMS (3)	- - -	3051084B	- - -
73	NG Brnr Orifice, HCS-80, U.S., No. 40 DMS (3)	- - -	3051097B	- - -
73	NG Brnr Orifice, HCS-90, U.S., No. 38 DMS (3)	- - -	3051100B	- - -
73	NG Brnr Orifice, HCS-90/80, Cdn. No. 39 DMS (3)	- - -	3051096B	- - -
73	NG Brnr Orifice, HCS-110, U.S., No. 40 DMS (4)	- - -	- - -	N/A
73	NG Brnr Orifice, HCS-120, U.S., No. 38 DMS (4)	- - -	- - -	3051100B
73	NG Brnr Orifice, HCS-120/110, Cdn. No. 39 DMS (4)	- - -	- - -	3051096B
73	LP Brnr Orifice, HCS-40, Cdn. Sea Level, 1.32 mm (2)	N/A	- - -	- - -
73	LP Brnr Orifice, HCS-40, Cdn. High Altitude, 1.25 mm (2)	N/A	- - -	- - -
73	LP Brnr Orifice, HCS-40, U.S., 1.32 mm (2)	N/A	- - -	- - -
73	LP Brnr Orifice, HCS-50, Cdn., S/L, 1.45 mm (2)	N/A	- - -	- - -
73	LP Brnr Orifice, HCS-50, Cdn., H/A, 1.40 mm (2)	N/A	- - -	- - -
73	LP Brnr Orifice, HCS-50, U.S., 1.56 mm (2)	N/A	- - -	- - -
73	LP Brnr Orifice, HCS-60, Cdn., S/L, 1.61 mm (2)	3051116B	- - -	- - -

	HCS Series High Efficiency Condensing Gas Furnace - UltraMax (Original)			
Key No.	**Description**	**40, 50, 60**	**60, 70, 80, 90 70/60, 90/80**	**120,120/110**
73	LP Brnr Orifice, HCS-60, Cdn., H/A, 1.55 mm (2)	N/A	- - -	- - -
73	LP Brnr Orifice, HCS-60, U.S., 1.61 mm (2)	3051116B	- - -	- - -
73	LP Brnr Orifice, HCS-60, Cdn., S/L, No. 45 DMS (3)	- - -	N/A	- - -
73	LP Brnr Orifice, HCS-60, Cdn., H/A, 1.25 mm (3)	- - -	N/A	- - -
73	LP Brnr Orifice, HCS-60, U.S., 1.32 mm (3)	- - -	N/A	- - -
73	LP Brnr Orifice, HCS-70, Cdn., S/L, 1.45 mm (3)	- - -	N/A	- - -
73	LP Brnr Orifice, HCS-70, Cdn., H/A, 1.40 mm (3)	- - -	N/A	- - -
73	LP Brnr Orifice, HCS-70, U.S., 1.45 mm (3)	- - -	N/A	- - -
73	LP Brnr Orifice, HCS-80, Cdn., S/L, 1.55 mm (3)	- - -	N/A	- - -
73	LP Brnr Orifice, HCS-80, Cdn., H/A, 1.45 mm (3)	- - -	N/A	- - -
73	LP Brnr Orifice, HCS-80, U.S., 1.55 mm (3)	- - -	N/A	- - -
73	LP Brnr Orifice, HCS-90, Cdn., S/L, 1.61 mm (3)	- - -	3051116B	- - -
73	LP Brnr Orifice, HCS-90, Cdn., H/A, 1.55 mm (3)	- - -	N/A	- - -
73	LP Brnr Orifice, HCS-90, U.S., 1.61 mm (3)	- - -	3051116B	- - -
73	LP Brnr Orifice, HCS-110, Cdn., S/L, 1.55 mm (4)	- - -	- - -	N/A
73	LP Brnr Orifice, HCS-110, Cdn., H/A, 1.45 mm (4)	- - -	- - -	N/A
73	LP Brnr Orifice, HCS-110, U.S., 1.55 mm (4)	- - -	- - -	N/A
73	LP Brnr Orifice, HCS-120, Cdn., S/L, 1.61 mm (4)	- - -	- - -	3051116B
73	LP Brnr Orifice, HCS-120, Cdn., H/A, 1.53 mm (4)	- - -	- - -	N/A
73	LP Brnr Orifice, HCS-120, U.S., 1.61 mm (4)	- - -	- - -	3051116B
79	Pilot Bracket	10028	10028	10028
80	Pilot Burner, Q345A1024B, Honeywell	1380004	1380004	1380004
	Pilot Orifice, BCR-18, Natural Gas, H390686-4	21407	21407	21407
	Pilot Orifice, BBR-12, L.P. Gas, 390686-25	2012100A	2012100A	2012100A
80	*Pilot Burner, Alternate, Q373A2081*	N/A	N/A	N/A
80	Pilot Burner, Natural Gas, Robertshaw, 2S-6 1830-718	2012126	2012126	- - -
80	Pilot Burner, L.P. Gas, Robertshaw, 2S-6-30 (77241)	N/A	N/A	- - -
81	Pilot Tubing (/ft.)	1140146	1140146	1140146
86	Flame Sensor, Robertshaw, FS-1, 10-227	10848	10848	- - -
82	Upper Heat Shield	N/A	N/A	19962
83	Lower Heat Shield	N/A	N/A	17709
85	BSI Heat Shield Assembly	20252	N/A	19962
	Miscellaneous Group			
87	Air Filter, 16 x 25 x 1 Semi-Permanent	2180023	2180023	2180023

HCS Series High Efficiency Condensing Gas Furnace - UltraMax (Original)

Specifications

Natural Gas and Propane:

Model	Ratings BTU/HR		Main Blower	External Static Pressure				CFM @ 60 Rise	Clearances						AFUE %
				Low		High									
	Input	Output		E.S.P. IN. W.C.	Motor	E.S.P. in W.C.	Motor		Top	Front	Side 1	Side 2	Back	Vent	
HCS 40M	40,000	38,000	10-10	.10	1/3	.50	1/3	1280	1	6	1	6	0	0	
HCS 60M	60,000	55,440	10-10	.12	1/2	.50	1/2	1280	1	6	1	6	0	0	90.7
HCS 70M	70,000	64,722	10-10	.12	1/2	.50	1/2	1490	1	6	1	6	0	0	91.3
HCS 80M	80,000	73,856	10-10	.15	1/2	.50	1/2	1360	1	6	1	6	0	0	91.4
HCS 90M	90,000	83,601	10-10	.15	1/2	.50	1/2	1234	1	6	1	6	0	0	91.4

Dimensions

Model	Cabinet			Return Plenum (F x G)	Warm Air Plenum (ExD)	Vent Dia.	Max. Equ. Vent Length Ft.	Filters (Permanent)	Pipe Size	Shipping WT. LBS.
	Width A	Depth B	HT. C							
HCS 40	20-1/4	29-3/4	52	14 x 22	18 x 19	2	60	16 x 25 x 1	1/2	230
HCS 60-90	20-1/4	29-3/4	52	14 x 22	18 x 19	2	60	16 x 25 x 1	1/2	285