WCS High Efficiency (Condensing) Downflow Gas-Fired Furnace - 1st Generation

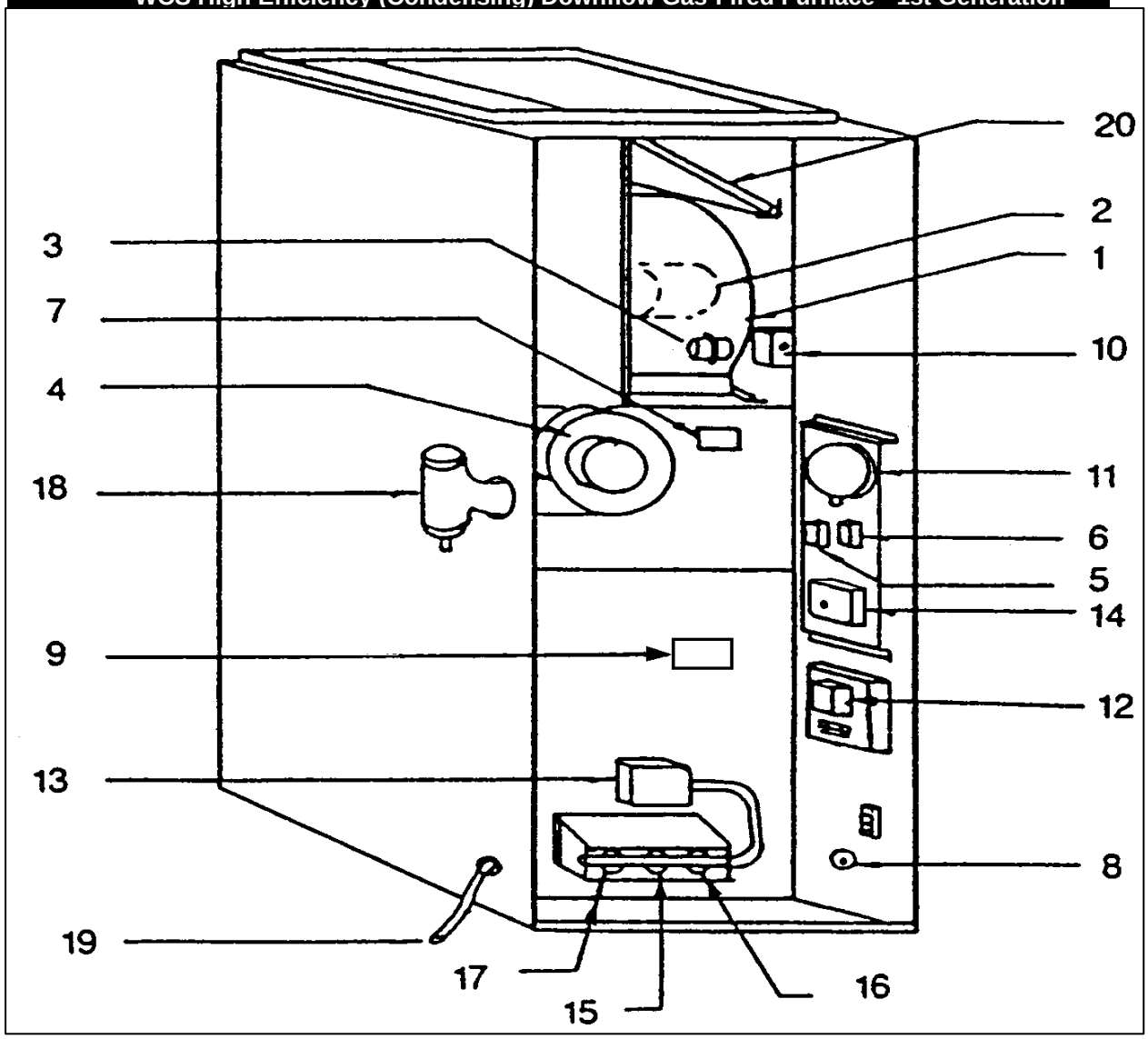

	WCS High Efficiency (Condensing) Downflow Gas-Fired Furnace - 1st Generation						
Key No.	**Description**	**60**	**70**	**70/60**	**80**	**90**	**90/80**
	Sheet Metal Group						
	Left Side Panel	N/A	N/A	N/A	N/A	N/A	N/A
	Right Side Panel	N/A	N/A	N/A	N/A	N/A	N/A
	Rear Panel, P86-1361	N/A	N/A	N/A	N/A	N/A	N/A
	Base Panel	N/A	N/A	N/A	N/A	N/A	N/A
	Blower Division Panel, P86-1351	N/A	N/A	N/A	N/A	N/A	N/A
	Top Front Rail Assembly, P86-1360	N/A	N/A	N/A	N/A	N/A	N/A
	Door Hanger, (*2 Required*)	N/A	N/A	N/A	N/A	N/A	N/A
	Baffle, Side Panel, 86-1343, (*2 Required*)	N/A	N/A	N/A	N/A	N/A	N/A
	Upper Door Panel, P86-1326	N/A	N/A	N/A	N/A	N/A	N/A
	Lower Door Panel	N/A	N/A	N/A	N/A	N/A	N/A
	Blower Access Panel	N/A	N/A	N/A	N/A	N/A	N/A
	Blower Access Door Assembly	N/A	N/A	N/A	N/A	N/A	N/A
	Inner Front Door Assembly	N/A	N/A	N/A	N/A	N/A	N/A
	Inner Front Assembly	N/A	N/A	N/A	N/A	N/A	N/A
	Control Panel	N/A	N/A	N/A	N/A	N/A	N/A
	Filter Support Assembly, P86-1345	N/A	N/A	N/A	N/A	N/A	N/A
	Z-Angle, (Filter Support)	N/A	N/A	N/A	N/A	N/A	N/A
	Heat Exchanger Group						
	Primary Heat Exchanger	N/A	N/A	N/A	N/A	N/A	N/A
	Gasket, Flange Mounting	N/A	N/A	N/A	N/A	N/A	N/A
	Recovery Coil Assembly	N/A	N/A	N/A	N/A	N/A	N/A
	Flue Box Cover, 85-0133	N/A	N/A	N/A	N/A	N/A	N/A
	Flue Box Cover Gasket, 85-0134	N/A	N/A	N/A	N/A	N/A	N/A
	Blower Group						
	Blower Assembly, Complete	N/A	N/A	N/A	N/A	N/A	N/A
1	Blower Housing and Wheel, Morrison 100-10R DD	30624	30624	30624	30624	30624	30624
	Blower Wheel, CM1020-1020	26430	26430	26430	26430	26430	26430
2	Blower Motor, 1/2 hp, 4-Speed, Direct Drive, PSC	102000131	102000131	102000131	102000131	102000131	102000131
	Motor Mounting Band, TR5868	17811	17811	17811	17811	17811	17811
	Blower Mounting Arms, TR6884B, (*3 Required*)	26251	26251	26251	26251	26251	26251
	Alternate 1/2 hp Direct Drive Motor Replacement Kit	27836	27836	27836	27836	27836	27836
3	Capacitor, 10 mfd @ 370 vac, M22P3710M00	27743	27743	27743	27743	27743	27743
3	Capacitor, 7.5 mfd @ 370 vac, M22P3707N00	27742	27742	27742	27742	27742	27742
	Capacitor Insulator, 44603-0009	27769	27769	27769	27769	27769	27769

	WCS High Efficiency (Condensing) Downflow Gas-Fired Furnace - 1st Generation						
Key No.	**Description**	**60**	**70**	**70/60**	**80**	**90**	**90/80**
	Capacitor Strap	27760	27760	27760	27760	27760	27760
	Blower Support	N/A	N/A	N/A	N/A	N/A	N/A
	Blower Angle, Front	N/A	N/A	N/A	N/A	N/A	N/A
	Blower Angle, Rear	N/A	N/A	N/A	N/A	N/A	N/A
	Electrical & Control Group						
9	Fan/Limit Control, 11½" Insertion, Limit set to 200°F	N/A	N/A	N/A	N/A	N/A	N/A
14	Ignition Control, Honeywell S8610U3009	21454	21454	21454	21454	21454	21454
	Electrode Cable, Honeywell 392286-1	18893	18893	18893	18893	18893	18893
	Ignition Control, Honeywell S8660D1002	21454	21454	21454	21454	21454	21454
	Electrode Cable, Honeywell 39394801-20, Raj x ¼" Quick-Connect	21455	21455	21455	21455	21455	21455
	Electrode Cable, Honeywell 392286-1, Raj x Raj	18893	18893	18893	18893	18893	18893
	Adaptor, Raj to Female 1/4" Quick Connect	N/A	N/A	N/A	N/A	N/A	N/A
11	Pressure Switch, -0.25" w.c., FS 6013-3088	11038	11038	11038	-	-	-
11	Pressure Switch, -0.75" w.c., FS 6013-3108	-	-	-	N/A	N/A	N/A
6	Relay, Induced Blower, SPST, 24v Coil	27739	27739	27739	27739	27739	27739
5	Relay, Blower, SPDT, 24v Coil	27767	27767	27767	27767	27767	27767
10	Switch, Blower Door, 2609-1010	N/A	N/A	N/A	N/A	N/A	N/A
	Door Switch Box (Bracket)	N/A	N/A	N/A	N/A	N/A	N/A
7	Switch, Auxiliary Limit, 150°F, 60T11 201787 L150	2010240	2010240	2010240	2010240	2010240	2010240
	Auxiliary Limit Support	N/A	N/A	N/A	N/A	N/A	N/A
8	Switch, Flame Roll-Out, 350°F, 10H14-212321	2012036	2012036	2012036	2012036	2012036	2012036
12	Transformer, 120/24 vac, 40 VA, 4000-01V18BB2 5-1611453-8	550001533	550001533	550001533	550001533	550001533	550001533
	Junction Box, 4 x 4 Utility Box	21318	21318	21318	21318	21318	21318
	Junction Box Cover	3011160A	3011160A	3011160A	3011160A	3011160A	3011160A
	Terminal Block, Low Voltage, 2 Post, 2-141 (*Thermostat*)	N/A	N/A	N/A	N/A	N/A	N/A
	Burner Group - Inshot *(Natural Gas Only)*						
	Burner Manifold Assembly	N/A	N/A	N/A	N/A	N/A	N/A
17	Inshot Burner, Left	N/A	N/A	N/A	N/A	N/A	N/A
15	Inshot Burner, Middle	N/A	N/A	N/A	N/A	N/A	N/A
16	Inshot Burner, Right	N/A	N/A	N/A	N/A	N/A	N/A
	Air Shutter, (*6 Required*)	N/A	N/A	N/A	N/A	N/A	N/A
	Air Shutter Spring, (*3 Required*)	2160078	2160078	2160078	2160078	2160078	2160078
13	Gas Valve, Natural Gas, VR8204A2001	1570012	1570012	1570012	1570012	1570012	1570012
	Pilot Burner Assembly, Q345A1024B	1380004	1380004	1380004	1380004	1380004	1380004
	Pilot Tubing, 23" x 1/4" O.D. Aluminium	1140146	1140146	1140146	1140146	1140146	1140146

	WCS High Efficiency (Condensing) Downflow Gas-Fired Furnace - 1st Generation						
Key No.	**Description**	**60**	**70**	**70/60**	**80**	**90**	**90/80**
	Pilot Bracket	15179	15179	15179	15179	15179	15179
	Burner Orifice, Natural Gas, No. 45 DMS, (*3 Required*)	-	-	N/A	-	-	-
	Burner Orifice, Natural Gas, No. 44 DMS, (*3 Required*)	3051099B	-	3051099B	-	-	-
	Burner Orifice, Natural Gas, No. 43 DMS, (*3 Required*)	-	3051094B	-	-	-	3051094B
	Burner Orifice, Natural Gas, No. 40 DMS, (*3 Required*)	-	-	-	3051097B	-	-
	Burner Orifice, Natural Gas, No. 39 DMS, (*3 Required*)	-	-	-	-	-	3051096B
	Burner Orifice, Natural Gas, No. 38 DMS, (*3 Required*)	-	-	-	-	3051100B	-
	Burner Heat Shield, Upper	N/A	N/A	N/A	N/A	N/A	N/A
	Burner Shield, Lower	N/A	N/A	N/A	N/A	N/A	N/A
	Burner Group - BSI Ribbon *(Natural or L.P. Gas)*						
	Burner Manifold Assembly	N/A	N/A	N/A	N/A	N/A	N/A
	BSI Ribbon Burner Assembly	10741	10741	10741	10741	10741	10741
13	Gas Valve, Natural Gas, VR8204A2001	1570012	1570012	1570012	1570012	1570012	1570012
13	Gas Valve, L.P. Gas, VR8204A2043B	18603	18603	18603	18603	18603	18603
	Pilot Burner Assembly, Q345A1024B	1380004	1380004	1380004	1380004	1380004	1380004
	Pilot Orifice, Natural Gas, BCR-18, 390686-4	21407	21407	21407	21407	21407	21407
	Pilot Orifice, L.P. Gas, BBR-12, 390686-25	2012100A	2012100A	2012100A	2012100A	2012100A	2012100A
	Pilot Tubing, 23" x 1/4" O.D. Aluminium	1140146	1140146	1140146	1140146	1140146	1140146
	Pilot Burner Bracket	3051060A	3051060A	3051060A	3051060A	3051060A	3051060A
	Burner Orifice, Natural Gas, No. 45 DMS, (*3 Required*)	-	-	N/A	-	-	-
	Burner Orifice, Natural Gas, No. 44 DMS, (*3 Required*)	3051099B	-	3051099B	-	-	-
	Burner Orifice, Natural Gas, No. 43 DMS, (*3 Required*)	-	3051094B	-	-	-	3051094B
	Burner Orifice, Natural Gas, No. 40 DMS, (*3 Required*)	-	-	-	3051097B	-	-
	Burner Orifice, Natural Gas, No. 39 DMS, (*3 Required*)	-	-	-	-	-	3051096B
	Burner Orifice, Natural Gas, No. 38 DMS, (*3 Required*)	-	-	-	-	3051100B	-
	Burner Orifice, L.P. Gas, 1.32 mm, (*3 Required*)	N/A	-	-	-	-	-
	Burner Orifice, L.P. Gas, 1.45 mm, (*3 Required*)	-	-	N/A	-	-	-
	Burner Orifice, L.P. Gas, 1.55 mm, (*3 Required*)	-	-	-	N/A	-	N/A
	Burner Orifice, L.P. Gas, 1.61 mm, (*3 Required*)	-	-	-	-	3051116B	3051116B
	Burner Heat Shield, Outer	3051002B	3051002B	3051002B	3051002B	3051002B	3051002B
	Burner Heat Shield, Inner	3051003B	3051003B	3051003B	3051003B	3051003B	3051003B
	Heat Shield Tab, (*2 Required*)	3051050A	3051050A	3051050A	3051050A	3051050A	3051050A
	Flue Collection and Drainage Group						
4	Induced Blower Assembly Replacement Kit	N/A	N/A	N/A	N/A	N/A	N/A
	Induced Blower Support Bracket	N/A	N/A	N/A	N/A	N/A	N/A

	WCS High Efficiency (Condensing) Downflow Gas-Fired Furnace - 1st Generation						
Key No.	**Description**	**60**	**70**	**70/60**	**80**	**90**	**90/80**
	Chute Orifice Adaptor, 3/4-inch I.D.	N/A	N/A	N/A	-	-	-
	Chute Orifice, 1/8, P86-1332	-	-	-	N/A	N/A	N/A
	Chute Orifice, 1.5-inch I.D.	N/A	N/A	N/A	N/A	N/A	N/A
	Drain Trap Assembly	N/A	N/A	N/A	N/A	N/A	N/A
18	Tee-Wye Assembly	N/A	N/A	N/A	N/A	N/A	N/A
	Terminal Tee-Wye Assembly	N/A	N/A	N/A	N/A	N/A	N/A
	Rubber Coupling, 2", (*2 Required*)	N/A	N/A	N/A	N/A	N/A	N/A
	Rubber Coupling, 2" without clamps	27607	27607	27607	27607	27607	27607
	Clamp, 2-inch, (*for use with above*)	27608	27608	27608	27608	27608	27608
19	Drain Tubing, 3/8" I.D. x 9/16" O.D. (*per foot*)	N/A	N/A	N/A	N/A	N/A	N/A
	Miscellaneous Group						
	Installation, Operation & Maintenance Manual	N/A	N/A	N/A	N/A	N/A	N/A
	User's Manual	N/A	N/A	N/A	N/A	N/A	N/A
20	Air Filter, 10 x 20 x 1, Semi-Permanent, (*2 Required*)	N/A	N/A	N/A	N/A	N/A	N/A
	Inner Front Drain Gasket	N/A	N/A	N/A	N/A	N/A	N/A
	Inner Front Sensing Tube Gasket	N/A	N/A	N/A	N/A	N/A	N/A
	Chute Tube Gasket	N/A	N/A	N/A	N/A	N/A	N/A
	Pressure Switch Tubing, SILICONE, SR200, 1/8" ID, CLEAR	11344	11344	11344	11344	11344	11344

WCS High Efficiency (Condensing) Downflow Gas-Fired Furnace - 1st Generation

Specifications

Natural Gas and Propane:

Model	Ratings BTU/HR		Main Blower	Direct Drive H.P.	Belt H.P.	Cooling Capacity			AFUE	Filters (Permanent)	Shipping WT. LBS.
	Input	Output				Tons	H.P.	Max CFM @ .5 W.C.			
WCS 60	60,000	57,000	10-10	1/2	N/A	3	1/2	1300	94.0	20 x 20 x 1	230
WCS 70	70,000	65,700	10-10	1/2	N/A	3	1/2	1300	93.0	20 x 20 x 1	230
WCS 80	80,000	73,600	10-10	1/2	N/A	3	1/2	1300	92.5	20 x 20 x 1	230
WCS 90	90,000	83,700	10-10	1/2	N/A	3	1/2	1300	92.0	20 x 20 x 1	230
WCS 120	120,000	112,320	12-11T	3/4	N/A	3	3/4	2000	91.0	20 x 25 x 1	260

Dimensions

Model	Cabinet			Return Plenum (F x G)	Warm Air Plenum (ExD)	Vent Dia.	Max. Equ. Vent Length (Ft.)	Clearances				
	Width A	Depth B	HT. C					Top	Front	Sides	Back	Vent
WCS 60/90	20-1/4	28	62	19-1/2 x 18	16 x 16	2	60	1	6	1	0	0
WCS 120	21-1/2	27-1/2	56-1/2	20 x 19-1/2	16 x 18	2	60	1	6	1	0	0

The WCS first generation has serial numbers before 12700WCIN.