HDS-T Series High Efficiency Condensing Gas Furnace (1st Tubular Heat Exchanger Model)

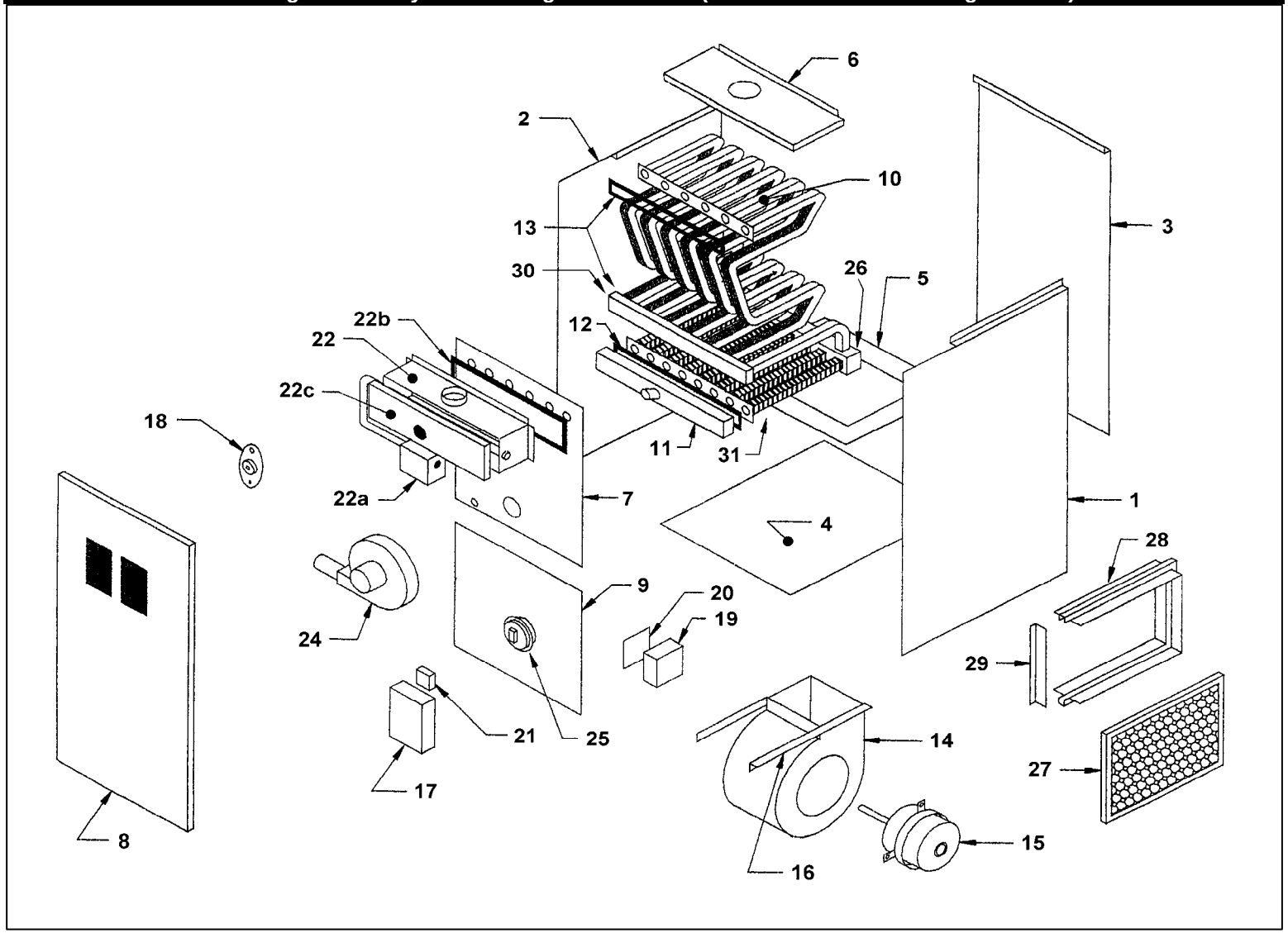

HDS-T Series High Efficiency Condensing Gas Furnace (1st Tubular Heat Exchanger Model)				
Ref. #	**Description**	**75T**	**90T**	**115T**
	Sheet Metal Group			
1	Right Side Panel	N/A	N/A	N/A
2	Left Side Panel	N/A	N/A	N/A
3	Rear Panel	N/A	N/A	N/A
4	Base Panel	N/A	N/A	N/A
5	Blower Division Panel	N/A	N/A	N/A
6	Top Panel	N/A	N/A	N/A
7	Inner Front Panel	N/A	N/A	N/A
8	Front Door	N/A	N/A	N/A
9	Blower Door	N/A	N/A	N/A
	Rear Panel Baffle	N/A	N/A	N/A
	Induced Blower Assembly Mounting Plate	N/A	N/A	N/A
	Control Mounting Panel, (*W-R 50A50-216*)	N/A	N/A	N/A
28	Filter Frame, 16 x 25	18020	18020	18020
29	Filter Frame End Support	5592B2	5592B2	5592B2
	Heat Exchanger Group			
10	Heat Exchanger Assembly, *(Tubular)*	N/A	N/A	N/A
	Gasket, Flue Pipe Flange	17938	17938	17938
	Heat Exchanger Bracket Support, (*2 required*)	N/A	N/A	N/A
	Heat Exchanger Bracket Support, (*2 required*)	N/A	N/A	N/A
30	Flue Box Cover	N/A	N/A	N/A
	Flue Box	N/A	N/A	N/A
	Gasket, Flue Box	N/A	N/A	N/A
13	Gasket, Primary Heat Exchanger Top	N/A	N/A	N/A
	Recovery Coil Assembly, Complete	N/A	N/A	N/A
31	Recovery Coil Assembly	N/A	N/A	N/A
	Recovery Coil Support Leg, Left Hand	N/A	N/A	N/A
	Recovery Coil Support Leg, Right Hand	N/A	N/A	N/A
11	Recovery Coil Front Cover	N/A	N/A	N/A
12	Gasket, Recovery Coil Front Cover	17916	17916	17916
26	Recovery Coil Rear Cover	N/A	N/A	N/A
	Sealant, GS#2-650, 1/8 x 1/2 x 25, (*per foot*)	N/A	N/A	N/A
	Blower Group - Direct Drive			
	Blower Assembly, Complete	N/A	N/A	N/A
14	Blower Housing with Wheel, Morrison 100-10T	30626	30626	30626
	Blower Wheel, 10-10 DD	26430	26430	26430
15	Motor, 1/2 hp, 4-speed, PSC, Direct Drive, GE 5KCP39LGY723BS	102000131	102000131	102000131
	Kit, Blower Motor Replacement w/ Mounting Hardware	27836	27836	27836
	Motor Mounting Band, TR5868	17811	17811	17811
	Motor Mounting Arms, TR6884B, (*3 required*)	26251	26251	26251
	Capacitor, 10 mfd @ 370vac	27743	27743	27743
	Capacitor Strap	27760	27760	27760
	Capacitor Insulator	27769	27769	27769
16	Blower Slide Rail, (*2 required*)	18189	18189	18189
	Electrical and Controls Group			

	HDS-T Series High Efficiency Condensing Gas Furnace (1st Tubular Heat Exchanger Model)			
Ref. #	**Description**	**75T**	**90T**	**115T**
17	Control, Integrated, W-R 50A55-843	27492	27492	27492
	Ignitor, Hot Surface, Norton 271W	26789S	26789S	26789S
18	Limit, Therm-O-Disc 60T11, 314110, L180°F	550001506	550001506	-
18	Limit, Therm-O-Disc 60T11, 314129, L220°F	-	-	28841
19	Junction Box	21318	21318	21318
20	Junction Box Cover	3011160A	3011160A	3011160A
	Door Switch, TA22BTLB	19172	19172	19172
	Door Switch Bracket	18932	18932	18932
21	Transformer, 4000-01V18BB2, 40 VA	550001533	550001533	550001533
	Limit, Flame Roll-out, 36TX16-6566, L200°F	28158	28158	28158
25	Pressure Switch, X07732, N/O, set at -1.60" w.c.	28107	28107	28107
	Wiring Harness, Integrated Control	N/A	N/A	N/A
	Burner Group / Combustion Box			
22	Burner Assembly, Natural Gas, Complete	N/A	N/A	N/A
22a	Gas Valve VR8205A2008B	26180	26180	26180
	Regulator Spring, L.P. Gas	19020	19020	19020
	Regulator Spring, Natural Gas	19021	19021	19021
	1/4" Barbed Vent Fitting (Straight Adapter), *Honeywell 392877*	N/A	N/A	N/A
	Burner, Inshot, (*6 required*)	28116	28116	28116
	Burner Manifold Assembly	N/A	N/A	N/A
	Burner Orifice			
	HDS-075T, Natural Gas, No. 50 DMS (*6 required*)	28290	-	-
	HDS-090T, Natural Gas, No. 49 DMS (*6 required*)	-	28184	-
	HDS-115T, Natural Gas, No. 47 DMS (*6 required*)	-	-	N/A
	HDS-075T, L.P. Gas, No. 61 DMS (*6 required*)	N/A	-	-
	HDS-090T, L.P. Gas, No. 56 DMS (*6 required*)	-	28291	-
	HDS-115T, L.P. Gas, No. 55 DMS (*6 required*)	-	-	28527
	Ignitor, Hot Surface, Norton 271W	26789S	26789S	26789S
	Ignitor Bracket	N/A	N/A	N/A
	Flame Sensor	26878	26878	26878
	Limit, Flame Roll-out, 36TX16-6566, L200°F	28158	28158	28158
	Combustion Box	N/A	N/A	N/A
	Combustion Box Top	N/A	N/A	N/A
	Combustion Box Top Baffle	N/A	N/A	N/A
	Combustion Air Baffle	N/A	N/A	N/A
	Burner Bracket	N/A	N/A	N/A
22b	Combustion Box Gasket	N/A	N/A	N/A
22c	Combustion Box Access Cover Assembly	N/A	N/A	N/A
	Sight Glass	N/A	N/A	N/A
	Sight Glass Gasket	N/A	N/A	N/A
	Sight Glass Retainer Plate	N/A	N/A	N/A
	Gasket, Combustion Box Access Cover	N/A	N/A	N/A
	Grommet, Manifold Pipe	N/A	N/A	N/A
	Roll-out Cover Plate	N/A	N/A	N/A
	Retainer, Gas Manifold	N/A	N/A	N/A
	Hosebarb, MIF 425	N/A	N/A	N/A

	HDS-T Series High Efficiency Condensing Gas Furnace (1st Tubular Heat Exchanger Model)			
Ref. #	**Description**	**75T**	**90T**	**115T**
	Hosebarb, Nut, Plastic, HN 1/4-28	20952	20952	20952
	Combustion Air Intake Connector, 3-inch	N/A	N/A	N/A
	Combustion Air Intake Gasket	N/A	N/A	N/A
	Flue Collection & Condensate Drainage Group			
24	Induced Blower Assembly Kit	28391	28391	28391
	Gasket, Induced Blower Tube	N/A	N/A	N/A
	Induced Blower Assembly Mounting Plate	N/A	N/A	N/A
	Induced Blower Inlet Rubber Coupling	N/A	N/A	N/A
	Drain Tube Gasket	17921	17921	17921
	Silicone Tubing, 3/16" 600-612041 (*per foot*)	21195	21195	21195
	Tee, Plastic, MIT 3	N/A	N/A	N/A
25	Pressure Switch, X07732, N/O, set at -1.60" w.c.	28107	28107	28107
	Chute Orifice, 1.16" I.D.	N/A	N/A	-
	Chute Orifice, 1.70" I.D.	-	-	N/A
	Condensate Drain Trap	N/A	N/A	N/A
	Condensate Drain Trap Plug with Gasket	21218	21218	21218
	Micellaneous Group			
	Filter Kit, Includes Filter and Frame w/ Support	550001458	550001458	555001458
27	Filter, 16 x 25 x 1 Semi-Permanent	2180023	2180023	2180023
28	Filter Frame	18020	18020	18020
29	Filter Frame End Support	5592B2	5592B2	5592B2
	Installation, Operation & Maintenance Manual	N/A	N/A	N/A
	User's Manual	N/A	N/A	N/A
	Plastic Tubing, 5/8" I.D., 7/8" O.D. (*per foot*)	1140149	1140149	1140149
	Conversion Kit - Natural Gas to L.P. Gas	N/A	N/A	N/A
	Conversion Kit - L.P. Gas to Natural Gas	28348	28348	28348

HDS-T Series High Efficiency Condensing Gas Furnace (1st Tubular Heat Exchanger Model)

Specifications

Natural Gas and Propane Gas:

Model	Ratings BTU/HR 0-2000' Input	Ratings BTU/HR 0-2000' Output	Main Blower	External Static Pressure Direct Drive .20 W.C.	External Static Pressure Direct Drive .50 W.C.	External Static Pressure Direct Drive HP	Cooling Capacity Tons	Cooling Capacity HP	Cooling Capacity MAX CFM	Shipping WT. LBS.	A.F.U.E.
HDS 75T	75,000	70,500	10 - 10T	HI	HI	1/2	1.5 - 4.0	1/2	1400	200	93.5
HDS 90T	90,000	84,500	10 - 10T	HI	HI	1/2	1.5 - 4.0	1/2	1400	200	92.9
HDS 115T	115,000	104,650	10 - 10T	HI	HI	1/2	1.5 - 4.0	1/2	1400	200	90.0

Dimensions

Model	Cabinet Width A	Cabinet Depth B	Cabinet Height C	Return Plenum	Warm Air Plenum	Air Filter	Vent Dia.	Clearances Top	Clearances Front	Clearances Sides	Clearances Back	Clearances Vent
HDST 75-115T	21½	28	46	14 x 22	20 x 18½	25x16x1	2 or 3	1	6	1	1	0