HCS-2 Series High Efficiency Condensing Gas Furnace - UltraMax II

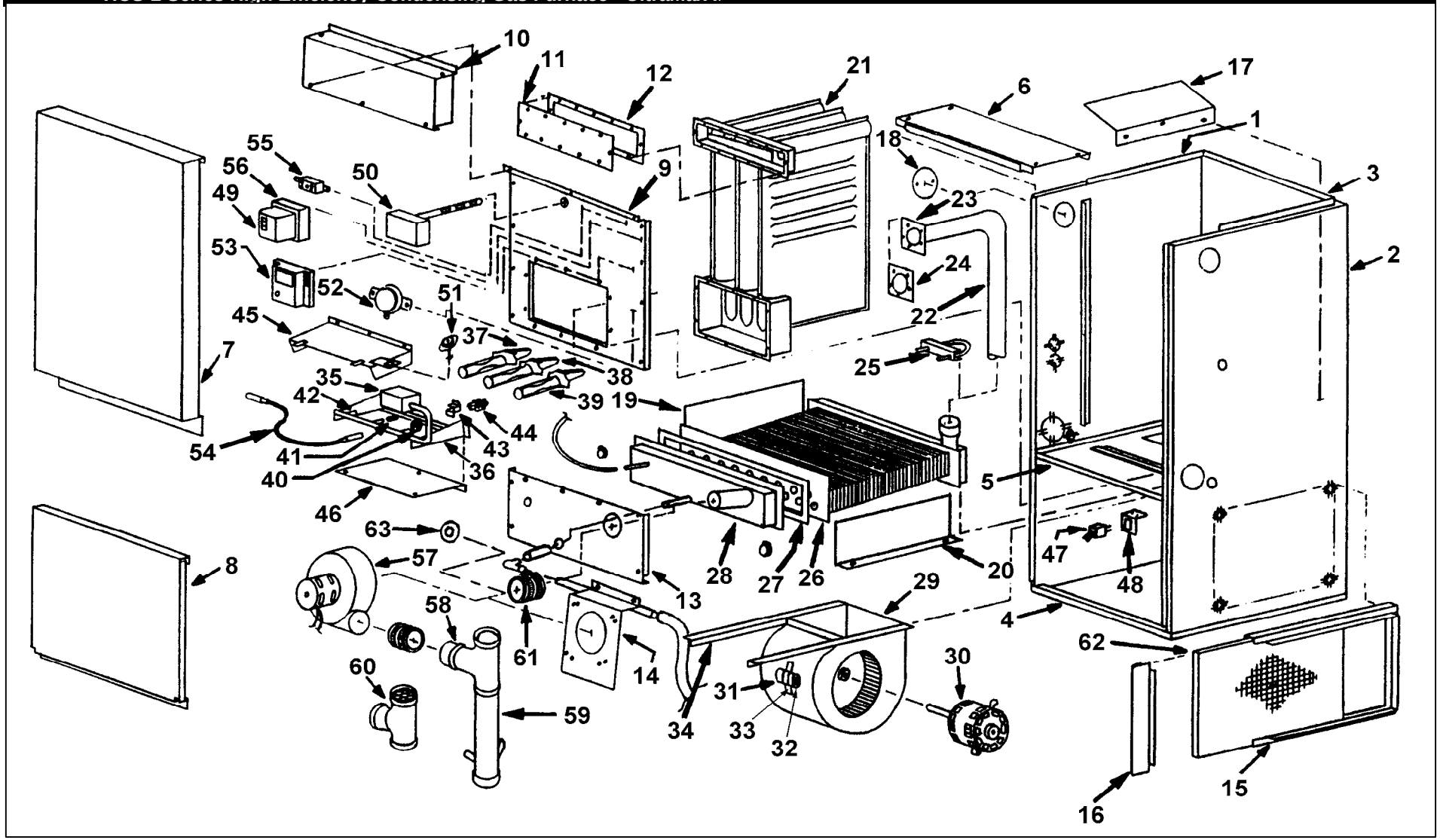

	HCS-2 Series High Efficiency Condensing Gas Furnace - UltraMax II					
Key No.	**Description**	**40**	**54 - 60**	**75**	**81 - 90**	**110 - 120**
	Sheet Metal Group					
1	Panel, Left Side	N/A	N/A	N/A	N/A	N/A
2	Panel, Right Side	N/A	N/A	N/A	N/A	N/A
3	Panel, Rear	N/A	N/A	N/A	N/A	N/A
4	Panel, Base	N/A	N/A	N/A	N/A	N/A
5	Panel, Blower Division	N/A	N/A	N/A	N/A	N/A
6	Panel, Top	N/A	N/A	N/A	N/A	N/A
7	Panel, Upper Front Door	N/A	N/A	N/A	N/A	N/A
8	Panel, Blower Door	N/A	N/A	N/A	N/A	N/A
9	Panel, Inner Front	N/A	N/A	N/A	N/A	N/A
	Panel, Control	- - -	- - -	- - -	- - -	N/A
10	Panel, Flue Box Access	N/A	N/A	N/A	N/A	N/A
11	Flue Box Cover	N/A	N/A	N/A	N/A	N/A
12	Gasket, Flue Box Cover	18178	18178	N/A	N/A	N/A
13	Panel, Recovery Coil Access	N/A	N/A	N/A	N/A	N/A
	Gasket, Chute Tube	17918	17918	17918	17918	17918
	Gasket, Pressure Sensing Tube	N/A	N/A	N/A	N/A	N/A
	Gasket, Drain Tube	17921	17921	17921	17921	17921
14	Bracket, Induced Blower	20787	20787	N/A	N/A	N/A
15	Filter Frame, 16 x 20	N/A	N/A	- - -	- - -	- - -
15	Filter Frame, 16 x 25	- - -	- - -	18020	18020	18020
16	Filter Frame End Support	N/A	N/A	5592B2	5592B2	5592B2
17	Baffle, Side Panel	N/A	N/A	N/A	N/A	N/A
18	Cover, Intake Air	3011325A	3011325A	- - -	- - -	N/A
19	Recovery Coil Baffle, Left Side	N/A	N/A	N/A	N/A	- - -
20	Recovery Coil Baffle, Right Side	N/A	N/A	N/A	N/A	- - -
	Heat Exchanger Group					
21	Heat Exchanger, Primary	N/A	N/A	N/A	N/A	N/A
21	Heat Exchanger, Primary (prior to 1988)	- - -	- - -	N/A	N/A	- - -
11	Flue Box Cover	N/A	N/A	N/A	N/A	N/A
12	Gasket, Flue Box Cover	18178	18178	N/A	N/A	N/A
22	Heat Exchanger Tube, Secondary	N/A	N/A	N/A	N/A	N/A
23	Flange, Flue Pipe	N/A	N/A	N/A	N/A	N/A
24	Gasket, Flange, Flue Pipe	17938	17938	17938	17938	17938
25	Muffler clamp, 2", MC 4200F	N/A	N/A	N/A	N/A	N/A
26	Recovery Coil Assembly (a.k.a. Secondary H. E.)	N/A	N/A	N/A	N/A	N/A

	HCS-2 Series High Efficiency Condensing Gas Furnace - UltraMax II					
Key No.	**Description**	**40**	**54 - 60**	**75**	**81 - 90**	**110 - 120**
26	Recovery Coil Assembly (prior to May 14, 1989)	- - -	- - -	N/A	N/A	- - -
26	Recovery coil	N/A	N/A	N/A	N/A	N/A
	Gasket, Rear Coil Cover, Side (*2 Required*)	N/A	N/A	N/A	N/A	N/A
	Gasket, Rear Coil Cover, End (*2 Required*)	N/A	N/A	N/A	N/A	N/A
	Cover, Rear, Recovery Coil	N/A	N/A	N/A	N/A	N/A
27	Gasket, Front, Recovery Coil	N/A	N/A	17916	17916	N/A
28	Cover Assembly, Front, Recovery Coil	N/A	N/A	N/A	N/A	N/A
28	Cover Assembly, Front, Recovery Coil (prior to May 1989)	- - -	- - -	N/A	N/A	- - -
	Secondary Heat Exchanger Rear Support	- - -	- - -	- - -	- - -	N/A
	Blower Group, Direct Drive					
	Blower Assembly, Complete	N/A	N/A	N/A	N/A	N/A
29	Blower Housing c/w Wheel, DC 916-916-5, 6010132	N/A	N/A	- - -	- - -	- - -
29	Blower Housing c/w Wheel, Morrison 100-10T DD	- - -	- - -	30626	30626	- - -
29	Blower Housing c/w Wheel, 120-11T DD, Morrison 05-32606	- - -	- - -	- - -	- - -	240006678
	Blower Wheel, Airdex CM 916-916, 6039012	N/A	N/A	- - -	- - -	- - -
	Blower Wheel, CM1020-1020 (10-10)	- - -	- - -	26430	26430	- - -
	Blower Wheel, Airdex CM 1220-1104	- - -	- - -	- - -	- - -	26653
30	Blower Motor, 1/3 hp, 4-Speed, PSC, OLE1036 A.O.S.	550001987	550001987	- - -	- - -	- - -
30	Blower Motor, 1/2 hp, 4-Speed, PSC, GE 5KCP39LGY723BS	- - -	- - -	102000131	102000131	- - -
	Blower Motor Replacement Kit	- - -	- - -	27836	27836	- - -
30	Blower Motor, 3/4 hp, 4-Speed, PSC, GE 5KCP39RGU691AS	- - -	- - -	- - -	- - -	102000132
	Motor Mounting Band, TR5868	17811	17811	17811	17811	17811
	Motor Mounting Arm, TR6885B, 9-9 Blower, (*3 Required*)	26250	26250	- - -	- - -	- - -
	Motor Mounting Arm, TR6884B, 10-10 Blower, (*3 Required*)	- - -	- - -	26251	26251	- - -
	Motor Mounting Arm, TR6169B, 12-10 Blower, (*3 Required*)	- - -	- - -	- - -	- - -	17812
31	Capacitor, Blower Motor, 5 mfd @ 370 vac	27741	27741	- - -	- - -	- - -
31	Capacitor, Blower Motor, 12.5 mfd @ 370 vac	27744	27744	- - -	- - -	- - -
31	Capacitor, Blower Motor, 10 mfd @ 370 vac	- - -	- - -	27743	27743	27743
31	Capacitor, Blower Motor, 20 mfd @ 370 vac	- - -	- - -	- - -	- - -	27745
32	Capacitor Insulator	27769	27769	27769	27769	27769
33	Capacitor Strap	27760	27760	27760	27760	27760
34	Blower Slide Rail, (*2 Required*)	18189	18189	18189	18189	17713
	Blower Front Angle	- - -	- - -	- - -	- - -	N/A
	Gasket, Blower, Rear	- - -	- - -	- - -	- - -	N/A
	Gasket, Blower, Front Support	- - -	- - -	- - -	- - -	17777

	HCS-2 Series High Efficiency Condensing Gas Furnace - UltraMax II					
Key No.	**Description**	**40**	**54 - 60**	**75**	**81 - 90**	**110 - 120**
	Blower Group, Belt Drive					
	Blower Assembly, Complete, Canadian Models	- - -	- - -	N/A	N/A	- - -
	Blower Assembly, Complete, U.S. Models	- - -	- - -	N/A	N/A	- - -
29	Blower Housing & Wheel (includes blower, wheel, shaft & bearings)	- - -	- - -	30627	30627	- - -
	Blower Wheel, G10, 6039004	- - -	- - -	26589	26589	- - -
	Pulley, Blower, 5 x 3/4	- - -	- - -	2240005	2240005	- - -
	Pulley, Blower, 6 x 3/4	- - -	- - -	- - -	2240006	- - -
	Pulley, Blower, 7 x 3/4	- - -	- - -	2240008	- - -	- - -
30	Motor, Belt Drive, 1/2 hp, single-speed, S48C11A51 A.O.S.	- - -	- - -	102000154	102000154	- - -
30	Motor, Belt Drive, 1/3 hp, two-speed, SGF2034V1 A.O.S.	- - -	- - -	N/A	- - -	- - -
30	Motor, Belt Drive, 1/2 hp, two-speed, SGF2054V1 A.O.S.	- - -	- - -	- - -	28008	- - -
	Pulley, Motor, Variable-Speed, 3¼ x 1/2	- - -	- - -	2240001	2240001	- - -
	Pulley, Motor, Variable-Speed, 3¼ x 5/8	- - -	- - -	- - -	N/A	- - -
	Fan Belt, 4L340, 34 inches	- - -	- - -	N/A	N/A	- - -
	Fan Belt, 4L360, 36 inches	- - -	- - -	- - -	N/A	- - -
	Fan Belt, 4L370, 37 inches	- - -	- - -	N/A	- - -	- - -
	Blower Bearing Bracket, *G10, 6080003*	- - -	- - -	28210	28210	- - -
	Blower Bearing Rubber Sleeve, *8860019 #16-3/4*	- - -	- - -	12982	12982	- - -
	Blower Bearing, Sleeve Type, *Delhi, 8100013 #8x3/4*	- - -	- - -	2040036	2040036	- - -
	Blower Bearing, Ball Bearing Type, *RCRx3/4 (Optional)*	- - -	- - -	2041046	2041046	- - -
	Blower Shaft, G10, *2100009, 16-5/8"*	- - -	- - -	2041042	2041042	- - -
34	Blower Slide Rail	- - -	- - -	18189	18189	- - -
	Electrical & Control Group					
47	Door Switch, A22B TLB-B	19172	19172	19172	19172	19172
48	Bracket, Door Switch	18932	18932	18932	18932	18932
49	Fan Center, 57-01V18BC4E231	27740	27740	27740	27740	27740
	Relay, Replacement, Fan Center, SPDT, 9400-04Q1999	27767	27767	27767	27767	27767
50	Fan/Limit Control, 11½", Limit set to 210°F	- - -	- - -	- - -	18121	- - -
50	Fan/Limit Control, 11½", Limit set to 230°F	- - -	- - -	- - -	- - -	18002
50	Fan/Limit Control, 11½", Limit set to 250°F	12615	12615	12615	- - -	- - -
	Fan/Limit Control Gasket	- - -	- - -	- - -	- - -	N/A
51	Limit, Flame, 36TR16-6031, 350°F (*snap disc type*)	19292	19292	19292	19292	19292
	Gasket, Flame Limit, (*snap disc type*)	N/A	N/A	N/A	N/A	N/A
	Limit, Flame, 10H14-2123 212321, 350°F, (*capillary type*)	2012036	2012036	2012036	2012036	2012036
	Bracket, Capilliary Limit Stand-off	N/A	N/A	N/A	N/A	N/A
	Bracket, Flame Roll-Out	19380	19380	19380	19380	19380

	HCS-2 Series High Efficiency Condensing Gas Furnace - UltraMax II					
Key No.	**Description**	**40**	**54 - 60**	**75**	**81 - 90**	**110 - 120**
52	Pressure Switch, -0.25" w.c., FS6013-3088	11038	- - -	- - -	- - -	- - -
52	Pressure Switch, -0.60" w.c., FS6013-447	- - -	18682	18682	18682	- - -
	Pressure Switch, -0.40" w.c., FS6013-125	- - -	- - -	- - -	- - -	18574
53	Ignition Control, Honeywell S8610U3009	21454	21454	21454	21454	21454
	Adaptor, Ignition Cable, Raj to 1/4" Quick Connect	N/A	N/A	N/A	N/A	N/A
54	Ignition Cable, Honeywell 394801-20	21455	21455	21455	21455	21455
54	Ignition Cable, Honeywell 392286-1	18893	18893	18893	18893	18893
55	Relay, Induced Blower, SPST, 9400-11Q 1611751-9	27739	27739	27739	27739	27739
56	Junction Box	21318	21318	- - -	- - -	21318
	Wiring Harness, Complete	N/A	N/A	N/A	N/A	- - -
	Continuous Low Speed Fan Relay, R4222B, (optional)	18619	18619	18619	18619	18619
	Burner Group, Inshot, Nat. Gas, Intermittent Spark Ignition					
	Inshot burners for natural gas only					
35	Gas Valve, Natural Gas, VR8204A2001	1570012	1570012	1570012	1570012	1570012
36	Burner Manifold Assembly	N/A	N/A	N/A	N/A	N/A
37	Inshot Burner, Left	N/A	N/A	N/A	N/A	N/A
38	Inshot Burner, Middle	- - -	- - -	N/A	N/A	N/A
39	Inshot Burner, Right	N/A	N/A	N/A	N/A	N/A
40	Air Shutter	N/A	N/A	N/A	N/A	N/A
41	Air Shutter Spring	2160078 (2)	2160078 (2)	2160078 (3)	2160078 (3)	2160078 (4)
43	Pilot Bracket	15179	15179	15179	15179	15179
44	Pilot Burner, Q345A1024B	1380004	1380004	1380004	1380004	1380004
	Pilot Orifice, BCR-18, Honeywell H390686-4	21407	21407	21407	21407	21407
	Pilot Tubing	1140146	1140146	1140146	1140146	1140146
45	Upper Heat Shield	N/A	N/A	N/A	N/A	N/A
46	Lower Manifold Shield	N/A	N/A	N/A	N/A	N/A
42	Burner Orifice, HCS2-40, Cdn. Sea Level, No. 44 DMS (2)	3051099B	- - -	- - -	- - -	- - -
42	Burner Orifice, HCS2-60/54, Cdn. Sea Level, No. 39 DMS (2)	- - -	3051096B	- - -	- - -	- - -
42	Burner Orifice, HCS2-60, U.S., No. 38 DMS (2)	- - -	3051100B	- - -	- - -	- - -
42	Burner Orifice, HCS2-75, No. 41 DMS (3)	- - -	- - -	10357	- - -	- - -
42	Burner Orifice, HCS2-90/81, Cdn., No. 39 DMS (3)	- - -	- - -	- - -	3051096B	- - -
42	Burner Orifice, HCS2-90, U.S., No. 38 DMS (3)	- - -	- - -	- - -	3051100B	- - -
42	Burner Orifice, HCS2-120/110, Cdn, No. 40 DMS (4)	- - -	- - -	- - -	- - -	3051097B
42	Burner Orifice, HCS2-120, U.S., No. 37 DMS (4)	- - -	- - -	- - -	- - -	N/A
	Inshot to Ribbon Burner Conversion Kit	29235	29235	N/A	N/A	N/A

	HCS-2 Series High Efficiency Condensing Gas Furnace - UltraMax II					
Key No.	**Description**	**40**	**54 - 60**	**75**	**81 - 90**	**110 - 120**
	Burner Group, BSI, Intermittent Spark Ignition					
35	Gas Valve, Natural Gas, VR8204A2001	1570012	1570012	1570012	1570012	1570012
35	Gas valve, L.P. Gas, VR8204A2183B	18603	18603	18603	18603	18603
36	Burner Manifold Assembly	N/A	N/A	N/A	N/A	N/A
	Burner Assembly, BSI (Ribbon Burners)	16725	16725	10741	10741	16726
43	Pilot Bracket	N/A	N/A	N/A	N/A	10028
44	Pilot Burner, Q345A1024B	1380004	1380004	1380004	1380004	1380004
	Pilot Orifice, Nat. Gas, BCR-18, Honeywell H390686-4	21407	21407	21407	21407	21407
	Pilot Orifice, L.P. Gas, BBR-12, Honeywell 390686-25	2012100A	2012100A	2012100A	2012100A	2012100A
	Pilot Orifice, BBR-14, L.P. Gas, Honeywell 390686-24	19714	19714	19714	19714	19714
	Pilot Tubing	1140146	1140146	1140146	1140146	1140146
	Heat Shield Assembly, BSI, Upper	20252	20252	N/A	N/A	19962
	Heat Shield Assembly, BSI, Lower	- - -	- - -	- - -	- - -	17709
42	NG Brnr Orifice, HCS2-40, Cdn., No. 44 DMS (2)	3051099B	- - -	- - -	- - -	- - -
42	NG Brnr Orifice, HCS2-60/54, Cdn., No. 39 DMS (2)	- - -	3051096B	- - -	- - -	- - -
42	NG Brnr Orifice, HCS2-60, U.S., No. 38 DMS (2)	- - -	3051100B	- - -	- - -	- - -
42	NG Brnr Orifice, HCS2-75, No. 41 DMS (3)	- - -	- - -	10357	- - -	- - -
42	NG Brnr Orifice, HCS2-90/81, Cdn., No. 39 DMS (3)	- - -	- - -	- - -	3051096B	- - -
42	NG Brnr Orifice, HCS2-120/110, Cdn., No. 40 DMS (4)	- - -	- - -	- - -	- - -	3051097B
42	NG Brnr Orifice, HCS2-120, U.S., No. 37 DMS (4)	- - -	- - -	- - -	- - -	N/A
42	LP Brnr Orifice, HCS2-40, Cdn., No. 55 DMS (2)	N/A	- - -	- - -	- - -	- - -
42	LP Brnr Orifice, HCS2-54, Cdn., No. 53 DMS (2)	- - -	3051111B	- - -	- - -	- - -
42	LP Brnr Orifice, HCS2-60, U.S., No. 52 DMS (2)	- - -	3051110B	- - -	- - -	- - -
42	LP Brnr Orifice, HCS2-75, No. 53 DMS (3)	- - -	- - -	3051111B	- - -	- - -
42	LP Brnr Orifice, HCS2-81, Cdn., No. 53 (3)	- - -	- - -	- - -	3051111B	- - -
42	LP Brnr Orifice, HCS2-90, U.S., No. 52 DMS (3)	- - -	- - -	- - -	3051110B	- - -
42	LP Brnr Orifice, HCS2-110, Cdn., 1.55 mm (4)	- - -	- - -	- - -	- - -	N/A
42	LP Brnr Orifice, HCS2-120, U.S., 1.61 mm (4)	- - -	- - -	- - -	- - -	3051116B
	Flue Collection Group					
57	Induced Blower Assembly	N/A	N/A	N/A	N/A	N/A
	Induced Blower, Reverse Discharge, (Kit)	N/A	N/A	N/A	N/A	N/A
58	Tee-Wye Outlet Assembly	N/A	N/A	N/A	N/A	- - -
59	Drain Trap Assembly	N/A	N/A	N/A	N/A	N/A
	Drain Plug, 1/2" PVC c/w Gasket	21218	21218	21218	21218	21218
60	Vent Terminal Tee-Wye Assembly	N/A	N/A	N/A	N/A	N/A
	Vent Outlet Screen, Plastic (2)	20249	20249	20249	20249	20249

	HCS-2 Series High Efficiency Condensing Gas Furnace - UltraMax II					
Key No.	**Description**	**40**	**54 - 60**	**75**	**81 - 90**	**110 - 120**
61	Rubber Coupling, 2" (less clamps)	27607	27607	27607	27607	27607
	Gear Clamp, 2" (for 2" rubber coupling)	27608	27608	27608	27608	27608
63	Chute Orifice, 11/16" ID	N/A	- - -	- - -	- - -	- - -
63	Chute Orifice, 1-1/8" ID	- - -	N/A	- - -	- - -	- - -
63	Chute Orifice, 1-5/16" ID	- - -	- - -	N/A	N/A	- - -
63	Chute Orifice, 1-3/4" ID	- - -	- - -	- - -	- - -	18655
	Chute Orifice Adapter, 5/8" Diameter.	N/A	N/A	- - -	- - -	- - -
	Chute Orifice Adapter, 1" Diameter.	- - -	- - -	N/A	N/A	- - -
	1/2 x 1/2 CPVC 90° Street Elbow	N/A	N/A	N/A	N/A	N/A
	5/8" ID, 7/8" 0D Vinyl Tubing, KO10-1014	1140149	1140149	1140149	1140149	1140149
	3/8" ID, 9/16" OD Vinyl Tubing, KO10-0609	N/A	N/A	N/A	N/A	N/A
	5/16" - 15/16" gear clamp	N/A	N/A	N/A	N/A	N/A
	Miscellaneous Group					
62	Air Filter, 16 x 20 x 1, Semi-Permanent	2180026	2180026	- - -	- - -	- - -
62	Air Filter, 16 x 25 x 1, Semi-Permanent	- - -	- - -	2180023	2180023	2180023
	Condensate Spring	N/A	N/A	N/A	N/A	- - -
	Installation, Operation & Maintenance Manual	N/A	N/A	N/A	N/A	N/A
	User's Manual	N/A	N/A	N/A	N/A	N/A
	Accessory Box Contents					
	Accessory Carton, Complete	N/A	N/A	N/A	N/A	N/A
	1/2 x 1/2 CPVC 90° Street Elbow	N/A	N/A	N/A	N/A	N/A
58	Tee-Wye Outlet Assembly	N/A	N/A	N/A	N/A	- - -
59	Drain Trap Assembly	N/A	N/A	N/A	N/A	N/A
	Drain Plug, 1/2" PVC c/w Gasket	21218	21218	21218	21218	21218
60	Vent Terminal Tee-Wye Assembly	N/A	N/A	N/A	N/A	N/A
	5/8 ID, 7/8 OD x 8" vinyl tubing	N/A	N/A	N/A	N/A	N/A
61	Rubber Coupling, 2" (less clamps)	27607	27607	27607	27607	27607
	Gear Clamp, 2" (for 2" rubber coupling)	27608	27608	27608	27608	27608
	5/8" ID, 7/8" 0D Vinyl Tubing, KO10-1014	1140149	1140149	1140149	1140149	1140149
	9/16" -1 Gear Clamp	N/A	N/A	N/A	N/A	N/A
16	Filter Frame End Support	N/A	N/A	5592B2	5592B2	5592B2
	2" Tee-Wye, PVC	2191021A	2191021A	2191021A	2191021A	2191021A

Specifications

Natural Gas and Propane:

Model	Ratings BTU/HR				Air Vol. CFM	Temp. Rise (F)	Main Blower	External Static Pressure - Belt Drive				External Static Pressure - Direct Drive			
	0-2000'		0-4500'					.20 W.C.		.50 W.C.		.20 W.C.		.50 W.C.	
	Input	Output	Input	Output				Ratio	H.P.	Drive	Motor	Speed	H.P.	Speed	Motor
HCS2 - 40	40,000	38,200	40,000	38,200	650	45 - 65	9-9	-	-	-	-	LO	1/3	HI	1/3
HCS2 - 60/54	60,000	56,400	54,000	50,220	900	45 - 65	9-9	-	-	-	-	MED	1/3	HI	1/3
HCS2 - 75	75,000	70,500	75,000	70,500	1120	45 - 65	10-10T	3¼ x 7	1/3	3¼ x 5	1/2	LO	1/2	HI	1/2
HCS2 - 90/81	90,000	85,100	81,000	76,300	1350	45 - 65	10-10T	3¼ x 6	1/2	3¼ x 5	1/2	MED	1/2	HI	1/2
HCS2 - 120/100	120,000	111,600	108,000	100,440	1400	65 - 95	12-11T	-	-	-	-	MED	3/4	HI	3/4

Dimensions

Model	Cabinet			Return Plenum	Warm Air Plenum	Vent Dia.	Max. Eff. Vent Length (Ft.)	Filters (Permanent)	Gas Pipe Dia.	Clearances					Shipping Wt.
	Width A	Depth B	HT. C							Top	Front	Sides	Back	Vent	
HCS2-40, 60/54	17-½	30-½	51	14 x 18	18 x 16	2	60	16 x 20 x 1	1/2	1	6	1	0	0	235
HCS2-75, 90/81	21-½	30-½	51	14 x 22	18 x 20	2	60	16 x 25 x 1	1/2	1	6	1	0	0	255
HCS-120/110	21-½	28	56-½	14 x 22	19½ x 19½	2	60	16 x 25 x 1	1/2	1	6	1	0	0	270

Model	A.F.U.E.
HCS2 - 40	94.7
HCS2 - 54	92.7
HCS2 - 60	92.9
HCS2 - 75	92.9
HCS2 - 81	93.2
HCS2 - 90	93.7
HCS(2) - 90	92.8
HCS(2) - 100	92.9
HCS(2) - 110	91.8
HCS(2) - 120	92.0