WCS High Efficiency (Condensing) Downflow Gas-Fired Furnace - 2nd Generation

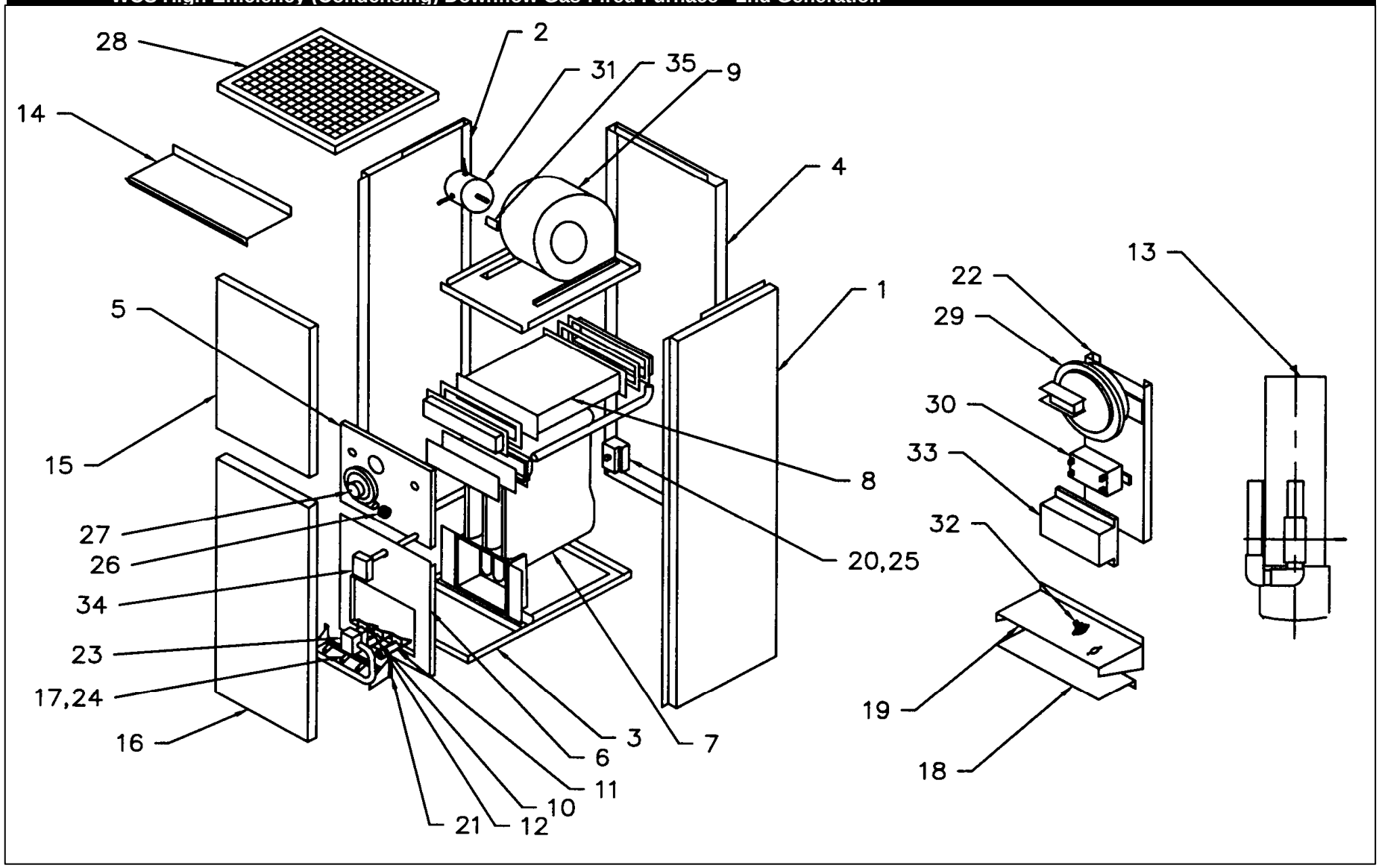

	WCS High Efficiency (Condensing) Downflow Gas-Fired Furnace - 2nd Generation						
Key No.	**Description**	**60 Cdn.**	**70 U.S.**	**70/60**	**80 Cdn.**	**90 U.S.**	**90/80**
	Sheet Metal Group						
1	Right Side Panel	N/A	N/A	N/A	N/A	N/A	N/A
2	Left Side Panel	N/A	N/A	N/A	N/A	N/A	N/A
3	Base Panel	N/A	N/A	N/A	N/A	N/A	N/A
4	Rear Panel	N/A	N/A	N/A	N/A	N/A	N/A
5	Upper Inner Front Panel	N/A	N/A	N/A	N/A	N/A	N/A
6	Lower Inner Front Panel	N/A	N/A	N/A	N/A	N/A	N/A
14	Top Panel	N/A	N/A	N/A	N/A	N/A	N/A
15	Upper Front Door Panel, (Blower Compartment Access)	N/A	N/A	N/A	N/A	N/A	N/A
16	Lower Front Door Panel	N/A	N/A	N/A	N/A	N/A	N/A
22	Control Panel	N/A	N/A	N/A	N/A	N/A	N/A
	Blower Division Panel	N/A	N/A	N/A	N/A	N/A	N/A
	Clean-Out Cover, (*2 Required*)	3011325A	3011325A	3011325A	3011325A	3011325A	3011325A
	Baffle, Side Panel, 86-1343, (*2 Required*)	N/A	N/A	N/A	N/A	N/A	N/A
	Filter Support Angle	N/A	N/A	N/A	N/A	N/A	N/A
	Filter Front Support	N/A	N/A	N/A	N/A	N/A	N/A
	Support Bracket, Induced Blower	N/A	N/A	N/A	N/A	N/A	N/A
	Heat Exchanger Group						
7	Primary Heat Exchanger	N/A	N/A	N/A	N/A	N/A	N/A
	Flue Box Cover, 85-0133	N/A	N/A	N/A	N/A	N/A	N/A
	Flue Box Gasket, 85-0134	N/A	N/A	N/A	N/A	N/A	N/A
8	Recovery Coil Assembly	N/A	N/A	N/A	N/A	N/A	N/A
	Recovery Coil	N/A	N/A	N/A	N/A	N/A	N/A
	Front Manifold Cover	N/A	N/A	N/A	N/A	N/A	N/A
	Gasket, Front Manifold Cover	N/A	N/A	N/A	N/A	N/A	N/A
	Rear Manifold Cover	N/A	N/A	N/A	N/A	N/A	N/A
	Gasket, Recovery Coil Rear, 18-1/8" x 9/16" x 1/8", (*2 Required*)	N/A	N/A	N/A	N/A	N/A	N/A
	Gasket, Recovery Coil Rear, 4-5/8" x 9/16" x 1/8", (*2 Required*)	N/A	N/A	N/A	N/A	N/A	N/A
	Gasket, Flange Mounting, Rear Flue Pipe	N/A	N/A	N/A	N/A	N/A	N/A
	Gasket, Mounting Flange	17938	17938	17938	17938	17938	17938
	Blower Group						
	Blower Assembly, Complete	N/A	N/A	N/A	N/A	N/A	N/A
9	Blower Housing and Wheel, Morrison 100-10R DD	30624	30624	30624	30624	30624	30624
	Blower Wheel, CM1020-1020	26430	26430	26430	26430	26430	26430
31	Blower Motor, 1/2 hp, 4-Speed, Direct Drive, PSC	102000131	102000131	102000131	102000131	102000131	102000131

	WCS High Efficiency (Condensing) Downflow Gas-Fired Furnace - 2nd Generation						
Key No.	**Description**	**60 Cdn.**	**70 U.S.**	**70/60**	**80 Cdn.**	**90 U.S.**	**90/80**
	Motor Mounting Band, TR5868	17811	17811	17811	17811	17811	17811
	Blower Mounting Arms, TR6884B, (*3 Required*)	26251	26251	26251	26251	26251	26251
	Alternate 1/2 hp Direct Drive Motor Replacement Kit	27836	27836	27836	27836	27836	27836
35	Capacitor, 10 mfd @ 370 vac, M22P3710M00	27743	27743	27743	27743	27743	27743
	Capacitor, 7.5 mfd @ 370 vac, M22P3707N00	27742	27742	27742	27742	27742	27742
	Capacitor Insulator, 44603-0009	27769	27769	27769	27769	27769	27769
	Capacitor Strap	27760	27760	27760	27760	27760	27760
	Blower Support Angle, (*2 Required*)	N/A	N/A	N/A	N/A	N/A	N/A
	Blower Angle, Front	N/A	N/A	N/A	N/A	N/A	N/A
	Blower Angle, Rear	N/A	N/A	N/A	N/A	N/A	N/A
	Electrical & Control Group						
20	Switch, Blower Door, A22B TLB-B	19172	19172	19172	19172	19172	19172
25	Bracket, Blower Door Switch	18932	18932	18932	18932	18932	18932
29	Pressure Switch, Set at -0.40" w.c., FS6013-125	18574	18574	18574	18574	18574	18574
30	Induced Blower Relay, SPST, 9400-11Q, 1611751-9	27739	27739	27739	27739	27739	27739
32	Flame Roll-Out Switch, 350°F, 36TR16-6031	19292	19292	19292	19292	19292	19292
	Gasket, Therm-O-Disc, Flame Roll-Out	N/A	N/A	N/A	N/A	N/A	N/A
33	Intermittent Spark Ignition Control, Honeywell S8610U3009	21454	21454	21454	21454	21454	21454
	Cable, Electrode, Honeywell 394801-20, Raj x ¼" Quick-Connect	21455	21455	21455	21455	21455	21455
	Cable, Electrode, *Original, Honeywell 392286-1,* Raj x Raj	18893	18893	18893	18893	18893	18893
	Adaptor, Raj to 1/4" Quick-Connect, (HS) 202137B	N/A	N/A	N/A	N/A	N/A	N/A
34	Fan/Limit Control, 11½" Insertion, Limit set to 200°F	27779	27779	27779	27779	27779	27779
	Fan Center, 1-1611760-0-57-01 V18BC4E231	27740	27740	27740	27740	27740	27740
	Auxiliary Limit Switch, 150°F, 60T11 201787	2010240	2010240	2010240	2010240	2010240	2010240
	Junction Box	21318	21318	21318	21318	21318	21318
	Burner Group - Inshot, (*Natural Gas Only*)						
10	Air Shutter	N/A	N/A	N/A	N/A	N/A	N/A
11	Inshot Burner, Center	N/A	N/A	N/A	N/A	N/A	N/A
11	Inshot Burner, Right	N/A	N/A	N/A	N/A	N/A	N/A
11	Inshot Burner, Left	N/A	N/A	N/A	N/A	N/A	N/A
12	Pilot Burner Assembly, Honeywell Q345A1024B	1380004	1380004	1380004	1380004	1380004	1380004
	Pilot Orifice, Natural Gas, BCR-18, 390686-4	21407	21407	21407	21407	21407	21407
	Pilot Bracket	15179	15179	15179	15179	15179	15179
	Pilot Tubing, 1/4" O.D. x 23"	1140146	1140146	1140146	1140146	1140146	1140146
17	Air Shutter Compression Spring	2160078	2160078	2160078	2160078	2160078	2160078

	WCS High Efficiency (Condensing) Downflow Gas-Fired Furnace - 2nd Generation						
Key No.	**Description**	**60 Cdn.**	**70 U.S.**	**70/60**	**80 Cdn.**	**90 U.S.**	**90/80**
18	Lower Burner Shield	N/A	N/A	N/A	N/A	N/A	N/A
19	Upper Burner Heat Shield	N/A	N/A	N/A	N/A	N/A	N/A
21	Burner Manifold Assembly	N/A	N/A	N/A	N/A	N/A	N/A
23	Gas Valve, Natural Gas, VR8204A2001	1570012	1570012	1570012	1570012	1570012	1570012
24	Burner Orifice, Natural Gas, No. 44 DMS, (*3 Required*)	-	-	3051099B	-	-	-
24	Burner Orifice, Natural Gas, No. 43 DMS, (*3 Required*)	-	3051094B	-	-	-	-
24	Burner Orifice, Natural Gas, No. 40 DMS, (*3 Required*)	-	-	-	-	-	3051097B
24	Burner Orifice, Natural Gas, No. 38 DMS, (*3 Required*)	-	-	-	-	3051100B	-
	Burner Group - BSI Ribbon, (*Natural or L.P. Gas*)						
	Burner Manifold Assembly	N/A	N/A	N/A	N/A	N/A	N/A
	BSI Ribbon Burner Assembly	10741	10741	10741	10741	10741	10741
	Pilot Burner Assembly, Honeywell Q345A1024B	1380004	1380004	1380004	1380004	1380004	1380004
	Pilot Orifice, Natural Gas, BCR-18, 390686-4	21407	21407	21407	21407	21407	21407
	Pilot Orifice, L.P. Gas, BBR-12, 390686-25	2012100A	2012100A	2012100A	2012100A	2012100A	2012100A
	Pilot Burner Assembly, Honeywell Q346A1006B	N/A	N/A	N/A	N/A	N/A	N/A
	Pilot Orifice, L.P. Gas, BBR-14, 390686-24	19714	19714	19714	19714	19714	19714
	Pilot Burner Bracket	3051060A	3051060A	3051060A	3051060A	3051060A	3051060A
	Pilot Tubing, 1/4" O.D. x 23"	1140146	1140146	1140146	1140146	1140146	1140146
	Gas Valve, Natural Gas, VR8204A2001	1570012	1570012	1570012	1570012	1570012	1570012
	Gas Valve, L.P. Gas, VR8204A2043B	18603	18603	18603	18603	18603	18603
	Heat Shield Assembly	N/A	N/A	N/A	N/A	N/A	N/A
	Burner Orifice, Natural Gas, No. 44 DMS, (*3 Required*)	-	-	3051099B	-	-	-
	Burner Orifice, Natural Gas, No. 43 DMS, (*3 Required*)	-	3051094B	-	-	-	-
	Burner Orifice, Natural Gas, No. 40 DMS, (*3 Required*)	-	-	-	-	-	3051097B
	Burner Orifice, Natural Gas, No. 38 DMS, (*3 Required*)	-	-	-	-	3051100B	-
	Burner Orifice, L.P. Gas, 1.32 mm, (3 Required)	N/A	-	-	-	-	-
	Burner Orifice, L.P. Gas, 1.45 mm, (3 Required)	-	N/A	-	-	-	-
	Burner Orifice, L.P. Gas, 1.53 mm, (3 Required)	-	-	-	N/A	-	-
	Burner Orifice, L.P. Gas, 1.61 mm, (3 Required)	-	-	-	-	3051116B	-
	Flue Collection and Drainage Group						
13	Drain Trap Assembly	N/A	N/A	N/A	N/A	N/A	N/A
	Drain Plug, 1/2" NPT, c/w Gasket	21218	21218	21218	21218	21218	21218
26	Rubber Coupling	N/A	N/A	N/A	N/A	N/A	N/A
	Rubber Coupling, 2" without clamps	27607	27607	27607	27607	27607	27607
	Clamp, 2-inch, (*for use with above*)	27608	27608	27608	27608	27608	27608

	WCS High Efficiency (Condensing) Downflow Gas-Fired Furnace - 2nd Generation						
Key No.	**Description**	**60 Cdn.**	**70 U.S.**	**70/60**	**80 Cdn.**	**90 U.S.**	**90/80**
27	Induced Blower Assembly Replacement Kit	N/A	N/A	N/A	N/A	N/A	N/A
	2" Tee-Wye, PVC	N/A	N/A	N/A	N/A	N/A	N/A
	Chute Orifice, 7/8" I.D.	N/A	N/A	N/A	-	-	-
	Chute Orifice, 1-3/16" I.D.	-	-	-	N/A	N/A	N/A
	Vinyl Tubing, 5/16" I.D. x 7/16" O.D.	1141005	1141005	1141005	1141005	1141005	1141005
	Vinyl Tubing, 5/8" I.D. x 7/8" O.D.	1140149	1140149	1140149	1140149	1140149	1140149
	Vent Terminal Assembly, 2" Tee-Wye, PVC	N/A	N/A	N/A	N/A	N/A	N/A
	Miscellaneous Group						
28	Air Filter, Semi-Permanent, 20 x 20 x 1	2180032	2180032	2180032	2180032	2180032	2180032
	Installation, Operation & Maintenance Manual	N/A	N/A	N/A	N/A	N/A	N/A
	User's Manual	N/A	N/A	N/A	N/A	N/A	N/A
	Inner Front Drain Gasket	17921	17921	17921	17921	17921	17921
	Chute Tube Gasket	N/A	N/A	N/A	N/A	N/A	N/A
	2" Bird Screen, Plastic	20249	20249	20249	20249	20249	20249
	Accessory Carton	N/A	N/A	N/A	N/A	N/A	N/A
	Accessory Carton						
	Vinyl Tubing, 5/8" I.D. x 7/8" O.D., 13-inches	1140149	1140149	1140149	1140149	1140149	1140149
	2" Schedule 40, PVC Pipe, 11-inches	N/A	N/A	N/A	N/A	N/A	N/A
	1/2 x 1/2 CPVC 90° Street Elbows, (*2 Included*)	N/A	N/A	N/A	N/A	N/A	N/A
	2" Bird Screen, Plastic, (*2 Included*)	20249	20249	20249	20249	20249	20249
	Drain Trap Assembly	N/A	N/A	N/A	N/A	N/A	N/A
	Drain Plug, 1/2" NPT, c/w Gasket	21218	21218	21218	21218	21218	21218
	Rubber Coupling	N/A	N/A	N/A	N/A	N/A	N/A
	Gear Clamp, 9/16" - 1" O.D., (*2 Included*)	N/A	N/A	N/A	N/A	N/A	N/A
	2" Tee-Wye, PVC, (*2 Included*)	N/A	N/A	N/A	N/A	N/A	N/A
	Screen, (*2 Included*)	N/A	N/A	N/A	N/A	N/A	N/A
	Combination Spacer, (*2 Included*)	N/A	N/A	N/A	N/A	N/A	N/A

WCS High Efficiency (Condensing) Downflow Gas-Fired Furnace - 2nd Generation

Specifications

Natural Gas and Propane:

Model	Ratings BTU/HR				Main Blower	Direct Drive Motor	Cooling Capacity			Clearances				
	0-2000'		0-4500'				Tons	H.P.	Max CFM @ .5 W.C.					
	Input	Output	Input	Output						Top	Front	Sides	Back	Vent
WCS-60	60,000	57,000	60,000	57,000	10-10	1/2	3	1/2	1300	1	6	1	0	0
WCS-70	70,000	66,500	60,000	57,000	10-10	1/2	3	1/2	1300	1	6	1	0	0
WCS-80	80,000	73,600	80,000	73,000	10-10	1/2	3	1/2	1300	1	6	1	0	0
WCS-90	90,000	83,700	80,000	73,000	10-10	1/2	5	1/2	2000	1	6	1	0	0

Dimensions

Model	Cabinet			Return Plenum (F x G)	Warm Air Plenum (ExD)	Vent Dia.	Max Equ. Vent Length (Ft.)	Air Filter	Shipping WT. LBS.
	Width	Depth	Height						
	A	B	C						
WCS-60 - 90	20-1/2	27-1/2	56-3/4	19 x 18 5/8	16 x 16	2	60	2 - 10 x 20 x 1	280

A.F.U.E. Listings

Model	Second Generation
WCS-60M	92.7
WCS-70M	91.7
WCS-80M	91.2
WCS-90M	90.7
WCS-90SM	92.1
WCS-100M	92.2
WCS-110M	90.2
WCS-120M	89.7