NDH Series - High Efficiency Downflow - Horizontal Gas-Fired Furnace (Consolidated)

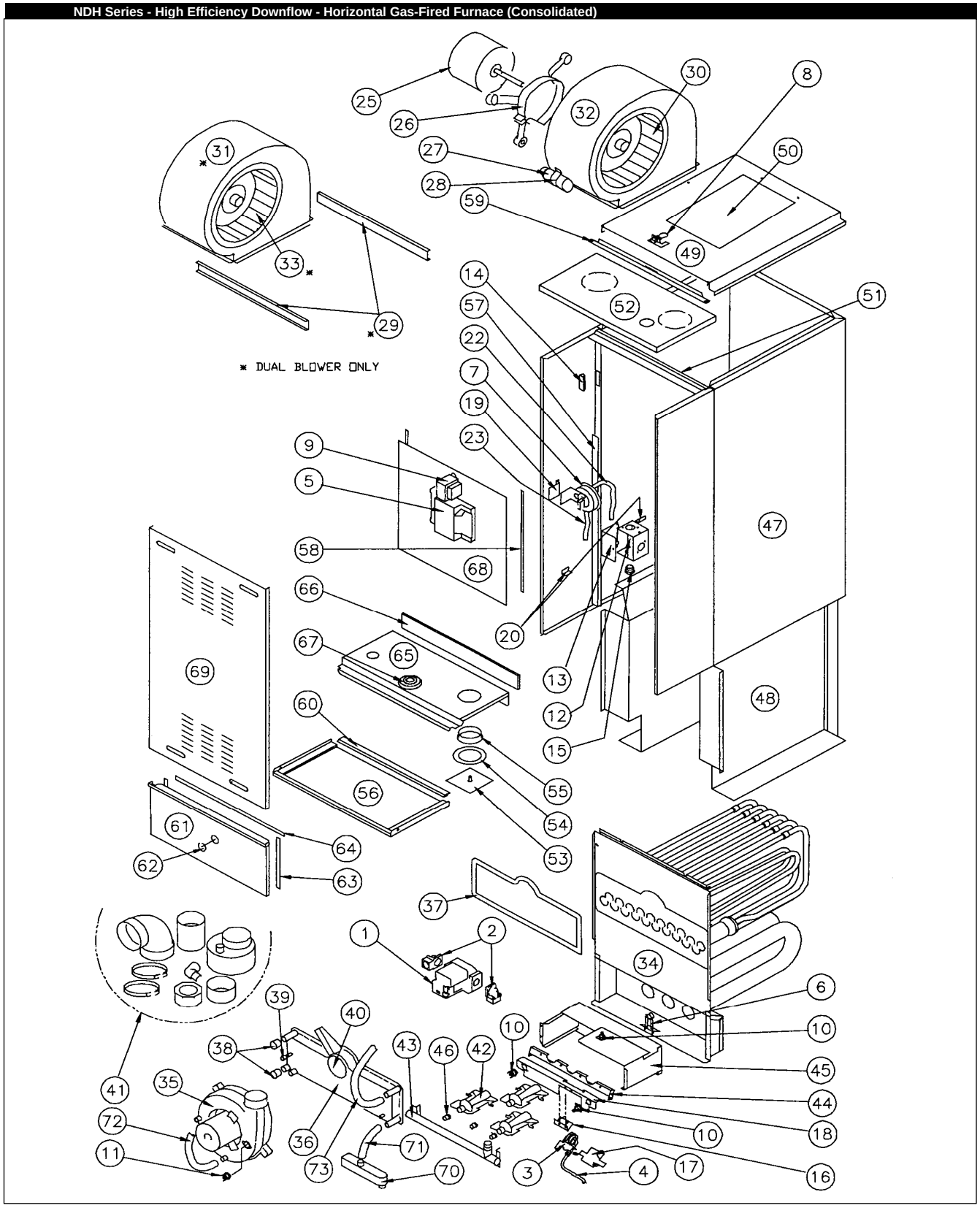

	NDH Series - High Efficiency Downflow - Horizontal Gas-Fired Furnace (Consolidated)							
		54000	72000	72000	90000	90000	108000	126000
Ref #	**Description**	**NDH054N12**	**NDH072N12**	**NDH072N16**	**NDH090N12**	**NDH090N16**	**NDH108N20**	**NDH126N20**
		1/3 hp	1/2 hp	3/4 hp	1/2 hp	3/4 hp	3/4 hp	3/4 hp
	Consolidated Reference No.	054-3	072-3	072-4	090-3	090-4	108-5	126-5
	Controls Group							
1	Gas Control, Natural Gas, Honeywell SV9500M	C4211700	C4211700	C4211700	C4211700	C4211700	C4211700	C4211700
2	Inlet Gas Connector	C4085300	C4085300	C4085300	C4085300	C4085300	C4085300	C4085300
3	Pilot/Ignitor, Honeywell Q3450D	C4103200	C4103200	C4103200	C4103200	C4103200	C4103200	C4103200
4	Pilot Tubing	3051126A	3051126A	3051126A	3051126A	3051126A	3051126A	3051126A
5	Fan Timer (406650)	C4116000	C4116000	C4116000	C4116000	C4116000	C4116000	C4116000
5	Fan Timer, w/ cont. low speed fan option, (425850)	C4258600	C4258600	C4258600	C4258600	C4258600	C4258600	C4258600
6	Primary Limit Switch	C4035000	C4035005	C4035000	C4035003	C4035002	C4035002	C4035002
7	Pressure Switch	C4213000	C4213000	C4213000	C4213000	C4213000	C4213000	C4213000
7	High Altitude Pressure Switch	N/A	N/A	N/A	N/A	N/A	N/A	N/A
8	Power Disconnect	N/A	N/A	N/A	N/A	N/A	N/A	N/A
9	Transformer, 40VA	C4100800	C4100800	C4100800	C4100800	C4100800	C4100800	C4100800
10	Burner Limit Switch, (*3 Required*)	C4035300	C4035300	C4035300	C4035300	C4035300	C4035300	C4035300
11	Vent Limit Switch	C4315000	C4315000	C4315000	C4315000	C4315000	C4315000	C4315000
	Hardware							
12	Junction Box	N/A	N/A	N/A	N/A	N/A	N/A	N/A
13	Junction Box Cover	N/A	N/A	N/A	N/A	N/A	N/A	N/A
14	Hem Bushing	N/A	N/A	N/A	N/A	N/A	N/A	N/A
15	Strain Relief	N/A	N/A	N/A	N/A	N/A	N/A	N/A
16	Pilot Mounting Bracket	C420510	C420510	C420510	C420510	C420510	C420510	C420510
17	Pilot Shield	N/A	N/A	N/A	N/A	N/A	N/A	N/A
18	Secondary Air Shield	N/A	N/A	N/A	N/A	N/A	N/A	N/A
19	Pressure Switch Bracket	N/A	N/A	N/A	N/A	N/A	N/A	N/A
20	Support Bracket (*3 Required*)	N/A	N/A	N/A	N/A	N/A	N/A	N/A
21	Wire Harness Kit (*not shown*)	4310800	4310800	4310800	4310800	4310800	4310800	4310800
22	Pressure Switch Tubing	N/A	N/A	N/A	N/A	N/A	N/A	N/A
23	Pressure Switch Tubing	N/A	N/A	N/A	N/A	N/A	N/A	N/A
	Blower Group							
24	Blower Assembly	C4102805	C4102803	C4102900	C4102803	C4102900	N/A	N/A
25	Blower Motor	N/A	C4212300	N/A	C4212300	N/A	C4212400	C4212400
26	Motor Mounting Kit	C4038700	C4038700	C4038701	C4038700	C4038701	C4038701	C4038701
27	Capacitor	C4036002	C4036002	C4036001	C4036002	C4036001	C4036001	C4036001

	NDH Series - High Efficiency Downflow - Horizontal Gas-Fired Furnace (Consolidated)							
		54000	72000	72000	90000	90000	108000	126000
Ref #	**Description**	**NDH054N12**	**NDH072N12**	**NDH072N16**	**NDH090N12**	**NDH090N16**	**NDH108N20**	**NDH126N20**
		1/3 hp	1/2 hp	3/4 hp	1/2 hp	3/4 hp	3/4 hp	3/4 hp
	Consolidated Reference No.	054-3	072-3	072-4	090-3	090-4	108-5	126-5
28	Capacitor Strap	N/A	N/A	N/A	N/A	N/A	N/A	N/A
29	Blower Housing Support	n/a	n/a	N/A	n/a	N/A	N/A	N/A
30	Blower Wheel, Direct Drive, (Convex)	C4039502	C4039504	C4039500	C4039504	C4039500	C4039502	C4039502
31	Blower Wheel, Direct Drive, (Concave)	n/a	n/a	C4039501	n/a	C4039501	N/A	N/A
32	Blower Housing	C4102401	C4102402	N/A	C4102402	N/A	N/A	N/A
33	Blower Housing	n/a	n/a	C4102404	n/a	C4102404	N/A	N/A
	Heat Exchanger Group							
34	Heat Exchanger Assembly	N/A	N/A	N/A	N/A	N/A	N/A	N/A
	Draft Inducer Group							
35	Draft Inducer Motor Assembly	C4311200	C4311200	C4311200	C4311201	C4311201	C4311201	C4311201
36	Inducer Pan Assembly	C4310600	C4310600	C4310600	C4310600	C4310600	C4310601	C4310601
37	Inducer Pan Gasket	C4249000	C4249000	C4249000	C4249000	C4249000	C4249000	C4249000
38	Rubber Cap, 0.59 ID	N/A	N/A	N/A	N/A	N/A	N/A	N/A
39	Rubber Cap, 0.25 ID	N/A	N/A	N/A	N/A	N/A	N/A	N/A
40	RTV	C4059900	C4059900	C4059900	C4059900	C4059900	C4059900	C4059900
41	Flue Outlet Kit	N/A	N/A	N/A	N/A	N/A	N/A	N/A
	Burner Group							
39	Main Burner	C4036500 (3)	C4036500 (4)	C4036500 (4)	C4036500 (5)	C4036500 (5)	C4036500 (6)	C4036500 (7)
40	Manifold	C400111	C400112	C400112	C400113	C400113	N/A	N/A
41	Main Burner Mount	N/A	N/A	N/A	N/A	N/A	N/A	N/A
42	Venturi Plate	C400682	N/A	N/A	N/A	N/A	N/A	C400685
43	Main Burner Orifices, Natural Gas	N/A	N/A	N/A	N/A	N/A	N/A	N/A
43	Main Burner Orifices, L.P. Gas	N/A	N/A	N/A	N/A	N/A	N/A	N/A
	Casing Group							
47	Casing	N/A	N/A	N/A	N/A	N/A	N/A	N/A
48	Radiation Shield Assembly	N/A	N/A	N/A	N/A	N/A	N/A	N/A
49	Blower Deck Assembly	N/A	N/A	N/A	N/A	N/A	N/A	N/A
50	Blower Deck Baffle	N/A	N/A	N/A	N/A	N/A	N/A	N/A
51	Door Channel	N/A	N/A	N/A	N/A	N/A	N/A	N/A
52	Top Panel Assembly	N/A	N/A	N/A	N/A	N/A	N/A	N/A

	NDH Series - High Efficiency Downflow - Horizontal Gas-Fired Furnace (Consolidated)							
		54000	72000	72000	90000	90000	108000	126000
Ref #	**Description**	**NDH054N12**	**NDH072N12**	**NDH072N16**	**NDH090N12**	**NDH090N16**	**NDH108N20**	**NDH126N20**
		1/3 hp	1/2 hp	3/4 hp	1/2 hp	3/4 hp	3/4 hp	3/4 hp
	Consolidated Reference No.	054-3	072-3	072-4	090-3	090-4	108-5	126-5
53	Restrictor Plate Assembly	N/A	N/A	N/A	N/A	N/A	N/A	N/A
54	Gasket, Restrictor Plate	N/A	N/A	N/A	N/A	N/A	N/A	N/A
55	Air Inlet Collar	C421770	C421770	C421770	C421770	C421770	C421770	C421770
56	Base Panel and Gaskets	N/A	N/A	N/A	N/A	N/A	N/A	N/A
57	Hem Gaskets	N/A	N/A	N/A	N/A	N/A	N/A	N/A
58	Door Gaskets	N/A	N/A	N/A	N/A	N/A	N/A	N/A
59	Duct Flange	N/A	N/A	N/A	N/A	N/A	N/A	N/A
60	S-Lock	N/A	N/A	N/A	N/A	N/A	N/A	N/A
61	Burner Access Panel Assembly	N/A	N/A	N/A	N/A	N/A	N/A	N/A
62	Burner Access Panel View Port	N/A	N/A	N/A	N/A	N/A	N/A	N/A
63	Burner Access Panel Gasket (*2 Required*)	N/A	N/A	N/A	N/A	N/A	N/A	N/A
64	Burner Access Panel Gasket	N/A	N/A	N/A	N/A	N/A	N/A	N/A
65	Burner Enclosure Top	N/A	N/A	N/A	N/A	N/A	N/A	N/A
66	Burner Enclosure Top Gasket	N/A	N/A	N/A	N/A	N/A	N/A	N/A
67	Gas Entry Grommet	N/A	N/A	N/A	N/A	N/A	N/A	N/A
68	Blower Door	N/A	N/A	N/A	N/A	N/A	N/A	N/A
69	Outer Door	N/A	N/A	N/A	N/A	N/A	N/A	N/A
	Condensate Group							
70	Trap Assembly	C4312100	C4312100	C4312100	C4312100	C4312100	C4312100	C4312100
71	Hose - Trap to Inducer Pan	N/A	N/A	N/A	N/A	N/A	N/A	N/A
72	Hose - Trap to Inducer Housing	C421501	C421501	C421501	C421501	C421501	C421501	C421501
73	Hose - Vent to Inducer Pan	N/A	N/A	N/A	N/A	N/A	N/A	N/A
	Accessory Group (not shown)							
74	Combustible Floor Base (10)	N/A	N/A	N/A	N/A	N/A	N/A	N/A
75	Filters, Downflow, (10), 16 x 20 x 1	N/A	N/A	N/A	N/A	N/A	N/A	N/A
76	Downflow Filter Kit	N/A	N/A	N/A	N/A	N/A	N/A	N/A
77	2-inch Rubber Coupling and Clamps (10)	N/A	N/A	N/A	N/A	N/A	n/a	n/a
78	3-inch Rubber Coupling and Clamps (10)	n/a	N/A	N/A	N/A	N/A	N/A	N/A
79	L.P. Conversion Kit, below 6000 Feet	C4222400	C4222400	C4222400	C4222400	C4222400	C4222400	C4222400
80	L.P. Conversion Kit, above 6000 Feet (U.S. Only)	N/A	N/A	N/A	N/A	N/A	N/A	N/A
81	Nat. Gas Conversion Kit, below 6000 Feet	C4223000	C4223000	C4223000	C4223000	C4223000	C4223000	C4223000
82	Nat. Gas Conversion Kit, above 6000 Feet (U.S. Only)	N/A	N/A	N/A	N/A	N/A	N/A	N/A

	NDH Series - High Efficiency Downflow - Horizontal Gas-Fired Furnace (Consolidated)							
		54000	72000	72000	90000	90000	108000	126000
Ref #	**Description**	**NDH054N12**	**NDH072N12**	**NDH072N16**	**NDH090N12**	**NDH090N16**	**NDH108N20**	**NDH126N20**
		1/3 hp	1/2 hp	3/4 hp	1/2 hp	3/4 hp	3/4 hp	3/4 hp
	Consolidated Reference No.	054-3	072-3	072-4	090-3	090-4	108-5	126-5
83	California NOx Screen (*order one for each burner*)	N/A	N/A	N/A	N/A	N/A	N/A	N/A
84	2" Concentric Vent	C4247600	C4247600	C4247600	n/a	n/a	n/a	n/a
85	3" Concentric Vent	n/a	C4247601	C4247601	C4247601	C4247601	C4247601	n/a
86	Touch-Up Paint Kit - Gray	N/A	N/A	N/A	N/A	N/A	N/A	N/A

NDH Series - High Efficiency Downflow - Horizontal Gas-Fired Furnace (Consolidated)											
Model No.	Htg Input	Htg Output	AFUE	Motor HP	Blower Size	Temp Rise	Cooling Tons	Dimensions			Vent Size
								Depth	Width	Height	
NDH054N12	54,000	48,900	90.4	1/3	10-6	30-60	1.5-3.0	29"	17 1/2"	39 5/8"	2"
NDH072N12	72,000	65,200	90.4	1/2	10-8	30-60	2.5-3.5	29"	17 1/2"	39 5/8"	2 or 3"
NDH072N16	72,000	65,200	90.4	3/4	Dual 10-4	25-55	2.5-4.0	29"	17 1/2"	39 5/8"	2 or 3"
NDH090N12	90,000	81,400	90.4	1/2	10-8	35-65	2.5-3.5	29"	20 1/2"	39 5/8"	2 or 3"
NDH090N16	90,000	81,400	90.4	3/4	Dual 10-4	35-65	2.5-4.0	29"	20 1/2"	39 5/8"	2 or 3"
NDH108N20	108,000	97,700	90.4	3/4	Dual 10-6	35-65	3.0-5.0	29"	23 1/2"	39 5/8"	3"
NDH126N20	126,000	114,000	90.4	3/4	Dual 10-6	45-75	3.5-5.0	29"	23 1/2"	39 5/8"	3"