MODEL GTH 50 - 100
DIAGRAM

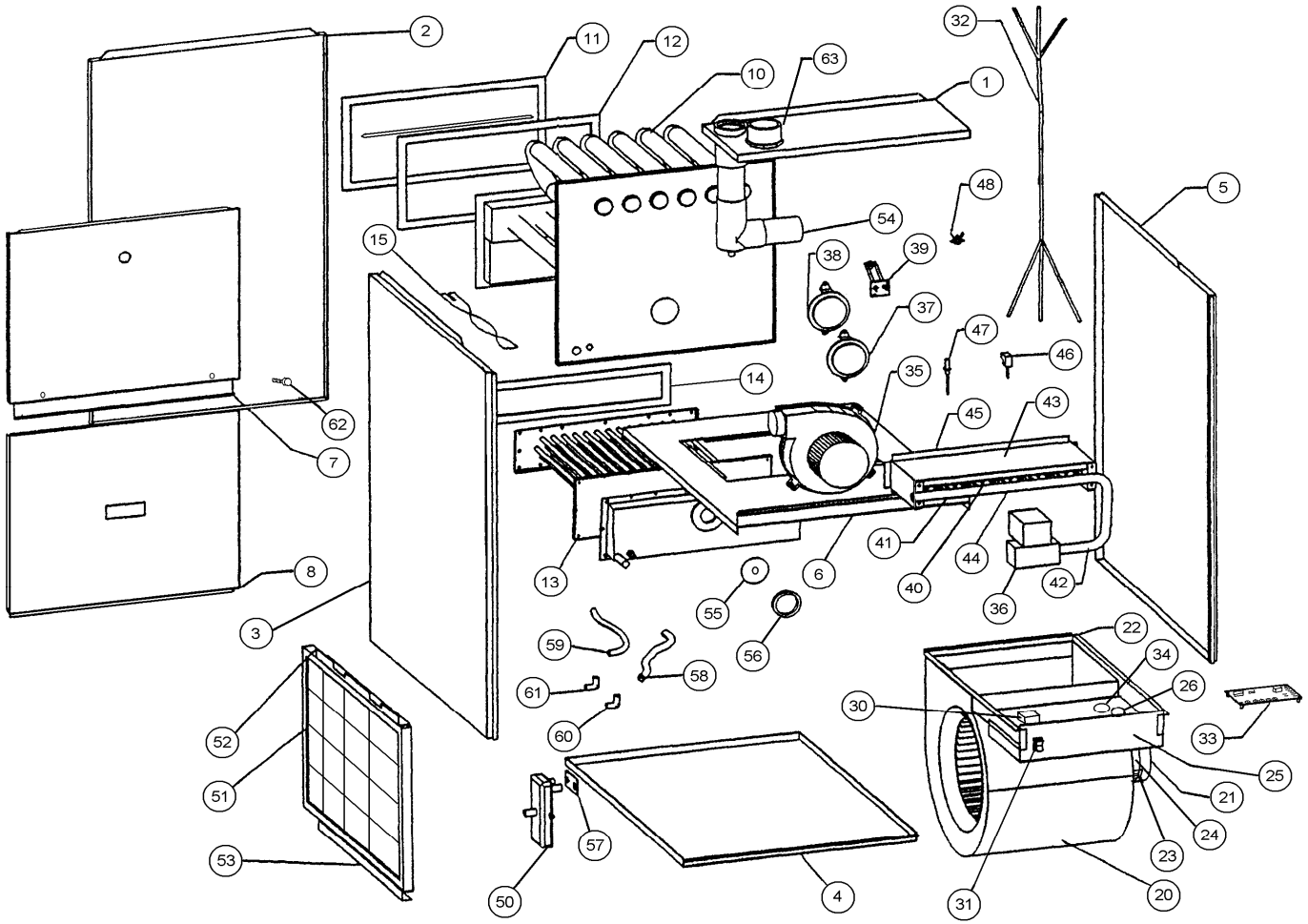

	GTH Series Gas-Fired High Efficiency (Condensing) Upflow Furnace				
Key No.	**Description**	**GTH 050**	**GTH 070**	**GTH 085**	**GTH 100**
	Cabinet Group				
1	Top Panel	N/A	N/A	N/A	N/A
2	Rear Panel	N/A	N/A	N/A	N/A
3	Left Side Panel Assembly	N/A	N/A	N/A	N/A
4	Base Panel	N/A	N/A	N/A	N/A
5	Right Side Panel Assembly	N/A	N/A	N/A	N/A
6	Blower Division Panel Assembly	28917	28917	28914	28914
7	Upper Front Door Panel	N/A	N/A	N/A	N/A
8	Lower Front Blower Door Panel	N/A	N/A	N/A	N/A
	Door Handle, PS-18	28673	28673	28673	28673
	Angle, Inner Front Side, (*2 Required*)	28713	28713	28713	28713
	Air Baffle, Rear	N/A	N/A	N/A	N/A
	Air Baffle, Left-side Panel	N/A	N/A	N/A	N/A
	Air Baffle, Right-Side Panel	N/A	N/A	N/A	N/A
	Heat Exchanger Group				
10	Heat Exchanger Assembly	N/A	N/A	N/A	N/A
11	Flue Box Cover	N/A	N/A	N/A	N/A
12	Flue Box Gasket	N/A	N/A	N/A	N/A
13	Recovery Coil Assembly	N/A	N/A	N/A	N/A
14	Recovery Coil Gasket, Sponge 300R, 1/8 x 9/16"	18199	18199	18199	18199
15	Heat Exchanger Tube Turbulator Baffle	28745 (3)	28745 (4)	28745 (5)	28745 (6)
	Blower Group				
20	Blower, c/w Wheel, GT12-7 DD, Delhi 9010138	550001520	550001520	- - -	- - -
	Blower Wheel, 12-7, Delhi 6030041	29770	29770	- - -	- - -
20	Blower, c/w Wheel, GT12-10 DD, Delhi 9010092	- - -	- - -	550001536	550001536
	Blower Wheel, 12-10, Delhi 6030196	- - -	- - -	29692	29692
21	Blower Motor, 1/2 hp, 4-Speed, PSC, GE 5KCP39LGY723BS	102000131	102000131	- - -	- - -
	Kit, Replacement 1/2 HP Motor with Mounting Hardware	27836	27836	- - -	- - -
21	Blower Motor, 3/4 hp, 4-Speed, PSC, AOS F48E05A51	- - -	- - -	102000132	102000132
	Kit, Replacement 3/4 HP Motor with 20 Mfd. Capacitor	- - -	- - -	550001531	550001531
22	Blower Support	N/A	N/A	28714	28714
23	Blower Motor Mounting Arm, (*3 Required*)	17812	17812	17812	17812

	GTH Series Gas-Fired High Efficiency (Condensing) Upflow Furnace				
Key No.	**Description**	**GTH 050**	**GTH 070**	**GTH 085**	**GTH 100**
24	Blower Motor Mounting Band	17811	17811	17811	17811
25	Control Panel	N/A	N/A	28710	28710
34	Induced Blower Capacitor, 4 mfd @ 370 vac, M22P3704M00	28689	28689	28689	28689
26	Blower Motor Capacitor, 10 mfd @ 370 vac, AOS Motor, M10CY17 1604	27743	27743	- - -	- - -
26	Blower Motor Capacitor, 12.5 mfd @ 370 vac, GE Motor, M22P3712N00	27744	27744	- - -	- - -
26	Blower Motor Capacitor, 20 mfd @ 370 vac, M20CY10	- - -	- - -	27745	27745
	Electrical & Controls Group				
30	Transformer, 115/24 v, 40 VA, BE161640REK0028	550001533	550001533	550001533	550001533
31	Blower Door Safety Switch, TA22BTLB	19172	19172	19172	19172
	Blower Door Safety Switch Bracket	18932	18932	18932	18932
32	Wire Harness - Supply to FTB	29748	29748	29748	29748
32	Wire Harness - FTB to Blower	29747	29747	29747	29747
32	Wire Harness - Controls, Valve, & IDB	29835	29835	29835	29835
32	Wire Harness - Junction Box, (Pigtail)	29366	29366	29366	29366
33	Fan/Timer Board, Honeywell ST9120U1011	550002269	550002269	550002269	550002269
34	Induced Blower Capacitor, 4 mfd @ 370 vac, M22P3704M00	28689	28689	28689	28689
35	Induced Blower Replacement Kit	29793	29793	29793	29793
36	Gas Valve / Ignition Control, Honeywell SV9520M2403B	28683	28683	28683	28683
37	Pressure Switch Kit, IDB, -1.40" w.c., Tridelta IS2 0140081F 5018	29777	29777	- - -	29777
37	Pressure Switch Kit, IDB, -1.30" w.c., Tridelta IS2 0130071F 5017	- - -	- - -	29776	- - -
38	Pressure Switch Kit, H.E. Coil, -0.50" w.c., Tridelta IS2 0050051F 5016	29778	29778	29778	29778
39	Primary Limit Switch, 36T01B3, L170, 44846, 3-inch insertion	28688	28688	28688	28688
	Junction Box	N/A	N/A	N/A	N/A
	Junction Box Cover	28722	28722	28722	28722
	Burner Group				
	Burner Assembly, Complete, Natural Gas	N/A	N/A	N/A	N/A
36	Gas Valve / Ignition Control, Honeywell SV9520M2403B	28683	28683	28683	28683
40	Inshot Burner, Beckett Tab-Loc DM007	28697 (3)	28697 (4)	28697 (5)	28697 (6)
41	Burner Orifice, NG, SL, 1.95 mm	28758 (3)	28758 (4)	28758 (5)	28758 (6)
41	Burner Orifice, L.P., SL, 1.20 mm	28876 (3)	28876 (4)	28876 (5)	28876 (6)
41	Burner Orifice, NG, HA, 1.90 mm, (Cdn.)	28875 (3)	28875 (4)	28875 (5)	28875 (6)
41	Burner Orifice, L.P., HA, 1.15 mm, (Cdn.)	28877 (3)	28877 (4)	28877 (5)	28877 (6)

	GTH Series Gas-Fired High Efficiency (Condensing) Upflow Furnace				
Key No.	**Description**	**GTH 050**	**GTH 070**	**GTH 085**	**GTH 100**
42	Burner Manifoild Pipe Assembly	28701	N/A	N/A	N/A
43	Combustion Box	N/A	N/A	N/A	N/A
44	Burner Support	N/A	N/A	N/A	N/A
45	Burner Inlet Orifice Plate	N/A	N/A	N/A	N/A
46	Hot Surface Ignitor, Norton 601 Type F, 120 v, MB483120	28685	28685	28685	28685
47	Flame Sensor, c/w 8" Leads, Honeywell 272872	28687	28687	28687	28687
48	Flame Roll-Out Switch, 36TX16 - L300°F	550001507	550001507	550001507	550001507
	Miscellaneous				
50	Condensate Drain Trap Assembly	27907	27907	27907	27907
51	Air Filter, Permanent, 16 x 25 x 1	2180023	2180023	2180023	2180023
52	Top Filter Rail	N/A	N/A	N/A	N/A
53	Bottom Filter Rail	N/A	N/A	N/A	N/A
54	Vent Tee Assembly	28847	28847	28846	28846
55	Induced Blower Inlet Orifice, GTH 050, 0.75" I.D.	28878	- - -	- - -	- - -
	Induced Blower Inlet Orifice Gasket, GTH 050	N/A	- - -	- - -	- - -
56	Induced Blower Inlet Gasket, 3/8" Thick	28814	28814	28814	28814
57	Condensate Drain Trap Gasket	28872 (2)	28872 (2)	28872	28872
58	Drain Line Tubing, 1/2" ID x 18", 1/8" wall, 6TE50075050	28637	28637	28637	28637
59	Drain Line Tubing, 5/8" ID x 18"	240006663	240006663	240006663	240006663
60	Drain Line Elbow, Barbed, 1/2 x 1/2 OD, 90°, (*2 Required*)	28765	28765	28765	28765
61	Drain Line Elbow, Barbed, 5/8 x 5/8 OD, 90°	28766	28766	28766	28766
62	Thumb Screws, (*2 Required*) 10-32 x 1/2, Washer Base	2141015	2141015	2141015	2141015
	Cage Nuts, (*2 Required*) 10-32 #202-136	28873	28873	28873	28873
63	Intake Air Connector, 436-020, 2"	28690	28690	28690	28690
	Sight Glass Plug, WP-1000	28694	28694	28694	28694
	Parts Bag Assembly	N/A	N/A	N/A	N/A
	Pressure Switch Tubing, 3/16", 600-612041 Gray	21195	21195	21195	21195
	Installation, Operation & Maintenance Manual	29782	29782	29782	29782
	User's Manual	29783	29783	29783	29783
	Concentric Vent Kits				
	2-inch Concentric Vent Kit	29570	29570	- - -	- - -
	3-inch Concentric Vent Kit	- - -	- - -	29571	29571

	GTH Series Gas-Fired High Efficiency (Condensing) Upflow Furnace				
Key No.	**Description**	**GTH 050**	**GTH 070**	**GTH 085**	**GTH 100**
	Repair Kits				
	Pressure Tap Repair Kit	550001913	550001913	550001913	550001913
	Conversion Kits				
	Natural Gas to L.P. Gas Conversion Kit, 0 - 2000'	28851	28851	28851	28851
	L.P. Gas to Natural Gas Conversion Kit, 0 - 2000'	28852	28852	28852	28852
	NG & LP High Altitude Conversion Kit, Cdn., 2000' - 4500'	28882	28882	28882	28882
	Notes:				
	Pressure Switches:				
	If replacing original P/N 28681 Pressure Switch, -1.40" w.c., Tridelta PPS10124-2740, Use Kit P/N 29777.				
	If replacing original P/N 28680 Pressure Switch, -1.30" w.c., Tridelta PPS10124-2739, Use Kit P/N 29776.				
	If replacing original P/N 28682 Pressure Switch, -0.50" w.c., Tridelta PPS10125-2741, Use Kit P/N 29778.				
	Parts Bag Assembly Contents:				
	18094 - (1) - Locknut, 2-inch				
	28638 - (1) - Gasket, O-Ring, NI-70 #141				
	28693 - (1) - Grommet, Gas Line, 825 1.625" dia.				
	28765 - (2) - Elbow, Barbed, ½ x ½ 90°, 501-2763 L88				
	28800 - (5) - Clamp, Hose, 2326 Black HO12, Clamp # 44-AC				
	28801 - (1) - Clamp, Hose, 2334 Black HO18, Clamp # 56				
	28872 - (1) - Gasket, Condensate Drain Trap				

GTH Series Gas-Fired High Efficiency (Condensing) Upflow Furnace

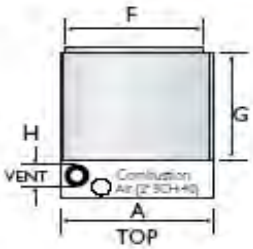

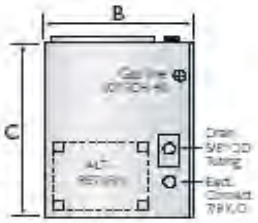

LEFT SIDE

RIGHT SIDE

NATURAL GAS/PROPANE UPFLOW SPECIFICATIONS

MODEL	Altitude	Input	Output	Main Blower	External Static Pressure			Cooling Capacity
					.20"	.50"	HP	Tons
GTH 50*	0-2000	50,000	47,000	12 - 7T	Med-Low	Med-High	1/2	1.5-3.0
	2000-4500	45,000	42,300	12 - 7T	Med-Low	Med-High	1/2	1.5-3.0
70*	0-2000	70,000	65,800	12 - 7T	Med-High	High	1/2	1.5-3.0
	2000-4500	63,000	59,200	12 - 7T	Med-High	High	1/2	1.5-3.0
85*	0-2000	85,000	80,750	12 - 10T	Med-Low	Med-High	3/4	1.5-4.0
	2000-4500	76,500	72,650	12 - 10T	Med-Low	Med-High	3/4	1.5-4.0
100*	0-2000	100,000	95,000	12 - 10T	Med-High	High	3/4	1.5-4.0
	2000-4500	90,000	85,500	12 - 10T	Med-High	High	3/4	1.5-4.0

* Indicates an ENERGY STAR® product.

DIMENSIONS (INCHES)

MODEL	Width	Depth	Height				
	A	B	C	D x E	F x G	Vent - H	Perm. Filter Size
GTH 50	17 1/2	29 1/4	36	15 x 23	16 1/2 x 20	2 or 3*	16 x 25
70	17 1/2	29 1/4	36	15 x 23	16 1/2 x 20	2 or 3*	16 x 25
85	21 1/4	29 1/4	36	15 x 23	20 x 20	3*	16 x 25
100	21 1/4	29 1/4	36	15 x 23	20 x 20	3*	16 x 25

*When using 3" vent, an increaser is required (unit vent outlet is 2" on all models).
Concentric vent kits available #29570 for GTH 50 & 70 and #29571 for GTH 85 & 100.

CLEARANCE TO COMBUSTIBLES (INCHES)

SURFACE	UPFLOW
TOP	1
FRONT	2
SIDES, BASE & REAR	0

Another top-quality gas furnace from a trusted name in heating for over 80 years.

GTH AIRFLOW DATA

MODEL	E.S.P. (In. w.c.)	AIRFLOW - CFM			
		LOW	MED-LOW	MED-HIGH	HIGH
GTH 50 70	0.20	505	772	1121	1328
	0.30	492	772	1109	1305
	0.40	478	763	1097	1259
	0.50	464	755	1060	1212
	0.60	450	723	1035	1162
GTH 85 100	0.20	1456	1633	1688	1792
	0.30	1413	1576	1633	1723
	0.40	1369	1517	1576	1651
	0.50	1301	1455	1496	1575
	0.60	1254	1391	1434	1516

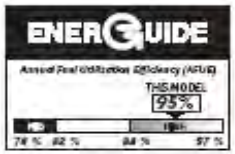

ENERGY STAR